SCATOLE INGRANAGGI

Hydraulic Pump

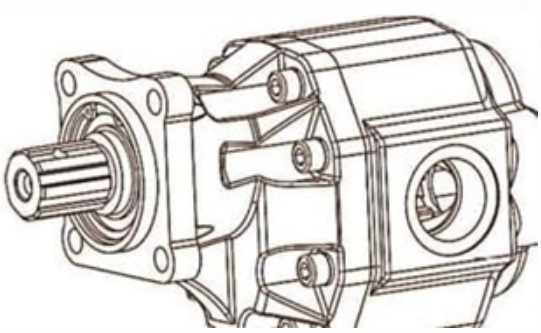

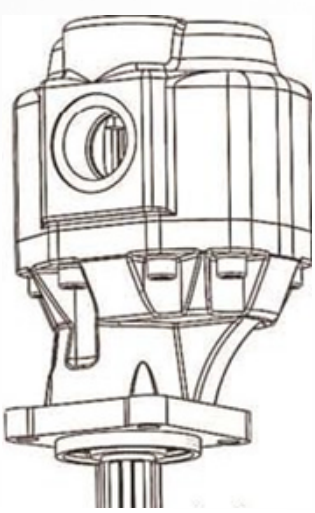

CMR AGRICULTURE

CMR Group azienda Leader da 30 anni nella progettazione e realizzazione di componentistica meccanica per diversi settori industriali, grazie all'esperienza acquisita e alla qualità dei prodotti distribuiti, si propone quale Partner affidabile per supportare la crescita dei propri Clienti.
Importanti collaborazioni in Italia e all'estero, in particolar modo nei comparti: macchine agricole, automazioni, macchinari industriali e nel settore ceramico, hanno consentito al Gruppo di acquisire nel tempo un considerevole e crescente know how, garanzia di elevata affidabilità, durata e alte prestazioni degli articoli trattati.
L'azienda è in grado di offrire un'ampia gamma di particolari assemblati e prodotti finiti per svariate applicazioni, studiati, progettati e realizzati su specifiche esigenze dei Clienti.
La distribuzione dei prodotti, sia in Italia sia all'estero può avvenire dalla sede principale di **CMR Group** o direttamente dai propri stabilimenti produttivi situati nel Far East, garantendo standard qualitativi elevati e KPI (Key Performances Indicator) sempre in linea con le attese dei propri Clienti.

CMR Group è Partner preferenziale d'importanti OEM appartenenti a diversi settori che richiedono forniture di prodotti just in time, con rapidità e puntualità, proponendo anche interessanti savings.

CMR Group *has been a leading designer and manufacturer of mechanical components for various industrial sectors for the past three decades and thanks to the experience acquired over the years and the quality of its products, is the ideal partner for customers intent on expanding their business.*
Important partnerships in Italy and abroad, especially in the agricultural machinery, automation, industrial machinery industries and the ceramic sector, have allowed the Group to acquire an increasing wealth of know how over time and ensure the high reliability, durability and first-rate performance of the articles supplied.

The company is able to offer a broad range of assembled parts and finished products for a vast number of applications, researched, designed and made to suit the customers' specific requirements.
The products are distributed in Italy and abroad by either the main headquarters of ***CMR Group*** *or directly by the Group's production facilities in the Far East, thereby guaranteeing high quality standards and KPI (Key Performances Indicator) that always comply with the customers' expectations.*

CMR Group *is the Partner of choice of important OEMs in different industries requiring products to be supplied on a just in time basis, i.e. rapidly and promptly, with the addition of interesting savings.*

FILOSOFIA
MISSION

Passione, impegno, curiosità, professionalità, competenze tecniche, ricerca e sviluppo, sono parte integrante del DNA di **CMR Group**. Le principali linee guida che caratterizzano **CMR Group** sono le seguenti:

- **Responsabilità verso i Clienti:**
  attraverso un impegno costante e una continua ricerca di soluzioni in grado di soddisfare le più svariate esigenze, fidelizzazione, qualità dei prodotti e servizi offerti, contenimento dei costi sono i fondamenti del Gruppo;

- **Attenzione verso la gestione dei Collaboratori:**
  caratterizzata dalla valorizzazione personale, dalla crescita professionale, dallo spirito di gruppo, dal rispetto dei requisiti di sicurezza, sono valori da sempre paradigma da seguire e ambire per il miglioramento delle condizioni lavorative interne al Gruppo;

- **Impegno verso l'Azienda:**
  assicurando un elevato senso di responsabilità nella miglior gestione del business volta a garantire i migliori risultati, il tutto gestito con etica, trasparenza e rispetto delle normative cogenti in materia legislativa e di protezione dei diritti umani sia in territorio Nazionale sia all'estero.

L'insieme dei concetti e valori sopra esposti, indirizza **CMR Group** verso ambiziosi traguardi futuri di sviluppo del business, di fidelizzazione dell'attuale parco Clienti, verso il consolidamento dei rapporti con tutti gli Stakeholder, sia in Italia sia all'estero, la ricerca costante di nuove quote di mercato, l'ampliamento della gamma di prodotti e servizi offerti e il potenziamento in tutte le aree aziendali.

*Passion, commitment, curiosity, professionalism, technical skills, research and development are an integral part of the Group's DNA. The main principles on which the philosophy of **CMR Group** is based are:*

- ***Responsibility towards the Customers:***
  customers through on-going commitment and continuous research into solutions able to meet the most varied requirements, promotion of customer loyalty, providing quality products and services and cost containment. These are the foundations on which the Group has built its business;

- ***Focus on Personnel Management:***
  meaning personnel enhancement, professional growth, team spirit, compliance with the safety requirements are necessary values that contribute towards improving the working conditions within the Group;

- ***Commitment towards the Company :***
  by ensuring a strong sense of responsibility and optimum business management focused on achieving the best results, all in the name of good business ethics, transparency and compliance with the mandatory laws governing the protection of human rights both in Italy and abroad.

*All the concepts and values described above have directed **CMR Group** towards ambitious future business development and customer loyalty promoting goals. In addition, **CMR Group** focuses on strengthening its relations with all stakeholders in Italy and abroad, while it constantly strives to acquire new market shares, to expand its range of products and services and reinforce all areas of the company.*

INSTALLATION NOTES

Before starting the system on a continuous basis , we suggest to adopt as follows simple precautions .

- Check for the direction of rotation of the pump to be consistent with the drive shaft one , be sure no reversion revolved .
- Check for the proper alignment of pump shaft and motor shaft , it is necessary that the connection does not induce axial or radial loads .
- Check if contact area between seal ring and shaft is clean , remove all dirt , chips and all foreign Bodies form flanges connecting inlet and delivery ports , dust could provoke quicker wear and leakage .
- Ensure that intake and return pipes ends are always below fluid level and as far from each other as Possible .
- Fill the pump with fluid , and turn it by hand .
- Disconnect pump drain during start up to bleed air off the circuit .
- Always avoid or limit load starting for pump longer life .

RATATION DIRECTION

Definition of rotation direction : when standing before the pump with driving shaft up with its projecting end towards the observer , the pump is rotating clockwise in case of right-hand rotation “C” , The contrary will happen with left-hand pumps “S” , keeping the same point of view .

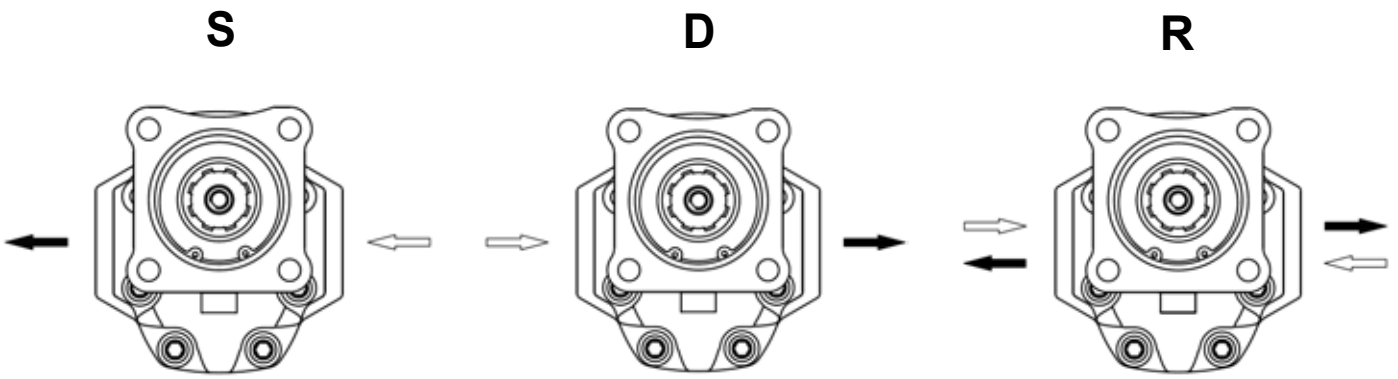

S=Anti-clockwise D=Clockwise R=Reversible

INLET PRESSURE

Under standard working conditions , intake pipe pressure is lower than atmospheric pressure . the operating inlet pressure should range between 0.7 and 3 bars (absolute) .

HYDRAULIC FLUIDS

Use specific mineral oil based hydraulic fluids having good antioxidant , anti-foaming (rapid deaeration) , anti-wear , anti--corrosion , and lubricating properties , Fluids should also comply with DIN 51525 and VDMA 24317 standards and get through 11th stage of FZG test . For the standard models , the temperature of the fluid should range between -10℃ and 80℃ .

Fluid kinematic viscosity ranges are the following :

Allowed range	6～500cSt
Recommended range	10～100cSt
Value allowed at startup	～2000cSt

FILTER RECOMMENDATION

It is widely known that most pumps early failures are due to contaminated fluids , As a warranty can't be issued for dirt-related wear , we recommend a filter to be used , which can reduce the degree of contamination to a permissible dimension in terms of the size and concentration of dirt particles .

The filtering system shall always ensure contamination levels not exceeding the values indicated below .

Pressure	<140 bar	140～210 bar	>210 bar
NAS 1638 Class	10	9	8
ISO 4406 Class	19/16	18/15	17/14
Ratio βx=75	25～40 mμ	12～15 mμ	6～12 mμ

INLET AND DELIVERY LINES

Hydraulic system pipes should show no sudden changes of direction , sharp bends and sudden differences in cross-section . They should not be too long or out of proportion .

Pipe cross-section should be sized so that fluid velocity does not exceed recommended values .

It is advisable to carefully consider the possible diameter reduction of the inlet or outlet pipes fitted on flange fittings . Reference values are the following .

Intake line	0.5～1.6 m/s
Delivery line	2～6 m/s
Return line	1.6～3 m/s

PRESSURE DEFINITION

P3 = Peak max.pressure
P2 = Intermittent max.pressure
P1 = Continuous max.pressure

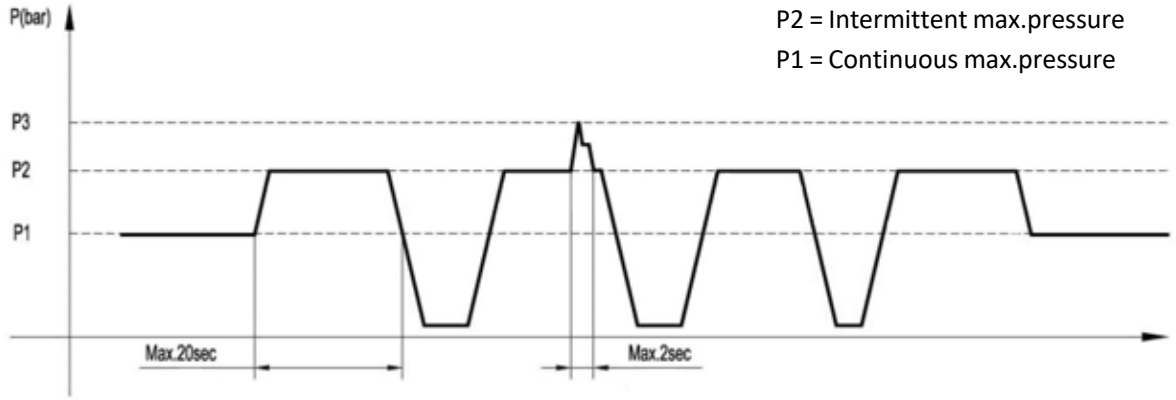

DESIGN CALCULATIONS FOR PUMP

Flow	Q	L/min
Torque	M	Nm
Power	P	kW
Speed	n	r/min
Pressure	△P	bar
Displacement	V	cm^3 /rev

Volumetric efficiency	ηv	≈0.92
Mechanical efficiency	ηhm	≈0.85
Total efficiency	ηt = ηv • ηhm	≈0.80

$Q = V \cdot n \cdot \eta v \cdot 10^{-3}$ [L/min]
M = (△P • V)/(62.83 • ηhm) [Nm]
P = (△P • Q)/(612 • ηt) [kW]

Group 30 gear pump CBLH series

HOW TO ORDER

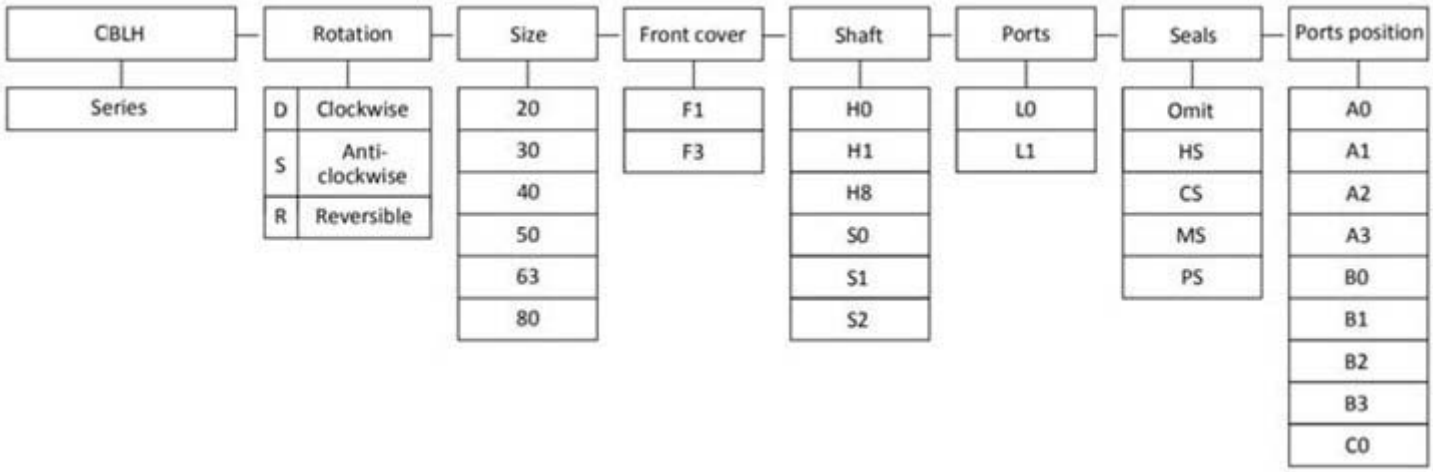

Seals

Omit - Range between -10℃and +80℃， inlet pressure up to max. 3 bar absolute (standard seal) .

HS - Version suitable for fluid at hi-temperatures , range between -10℃and +120℃ .

CS - Version suitable for fluid at low-temperatures , range between -40℃and +80℃ .

MS - Version suitable for inlet pressure up to max. 3 and 6 bar absolute .

PS - Version suitable for inlet pressure up to max. 3 and 10 bar absolute .

Ports position

A0 - Two ports , one side inlet and one side outlet .

A1 - Two ports , one side inlet and one back outlet .

A2 - Two ports , one back inlet and one side outlet .

A3 - Two ports , one back inlet and one back outlet .

B0 - Three ports , one side inlet , one side outlet and one back outlet .

B1 - Three ports , one side inlet , one back inlet and one side outlet .

B2 - Three ports , one side inlet , one back inlet and one back outlet .

B3 - Three ports , one back inlet , one side outlet and one back outlet .

C0 - Four ports , one side inlet ,one back inlet ,one side outlet and one back outlet .

Examples

CBLH-R-63-F1H8L1-C0 = KBLH series , Reversible , 63 cc/rev , F1 front cover , H8 shaft , L1 ports ,C0 ports position .

Group 30 gear pump 4 holes ISO CBLH series

- ★ Two pieces housing in robust cast iron material .
- ★ Auto-compensated by thrust plate .
- ★ High sustained working pressure and long life .
- ★ Anti-contamination .
- ★ Medium-heavy duty applications .

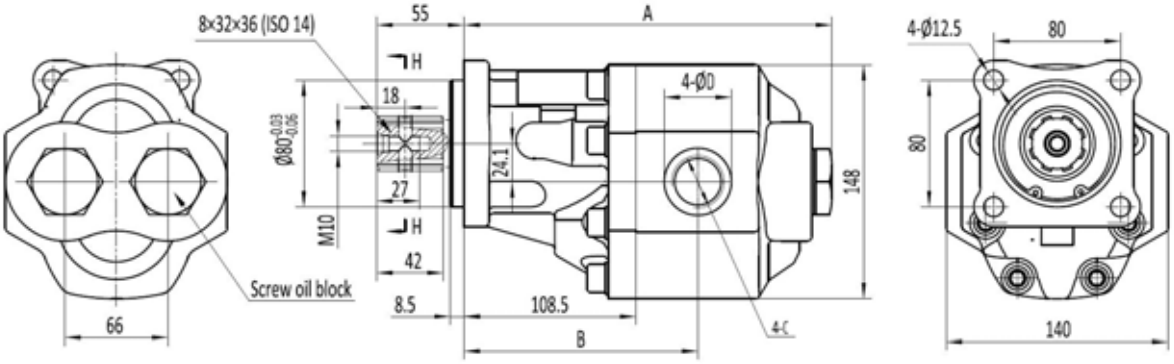

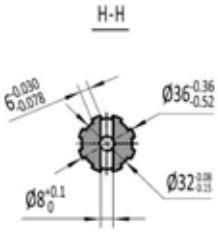

Type	Displacement	Max. pressure			Max. Continuous speed	Max. Intermittent speed	Min. speed	A	B	D	C	
		P1	P2	P3								
	(cm^3/r)	bar	bar	bar	(r/min)	(r/min)	(r/min)	mm	mm	mm	Inlet	Outlet
CBLH-R-20-F1	20	250	280	315	2000	2500	500	203	133.5	36	G3/4	G3/4
CBLH-R-30-F1	30	250	280	315	2000	2500	500	210	136.5	36	G3/4	G3/4
CBLH-R-40-F1	40	250	280	315	2000	2500	500	213	142.5	42.5	G3/4	G3/4
CBLH-R-50-F1	50	250	280	315	2000	2500	500	217	142.5	42.5	G1	G1
CBLH-R-63-F1	63	230	250	280	2000	2500	500	224	143.5	42.5	G1	G1
CBLH-R-80-F1	80	230	250	280	2000	2500	500	231	147.7	42.5	G1	G1

Group 30 gear pump 3 holes UNI CBLH series

- ★ Two pieces housing in robust cast iron material .
- ★ Auto-compensated by thrust plate .
- ★ High sustained working pressure and long life .
- ★ Anti-contamination .
- ★ Medium-heavy duty applications .

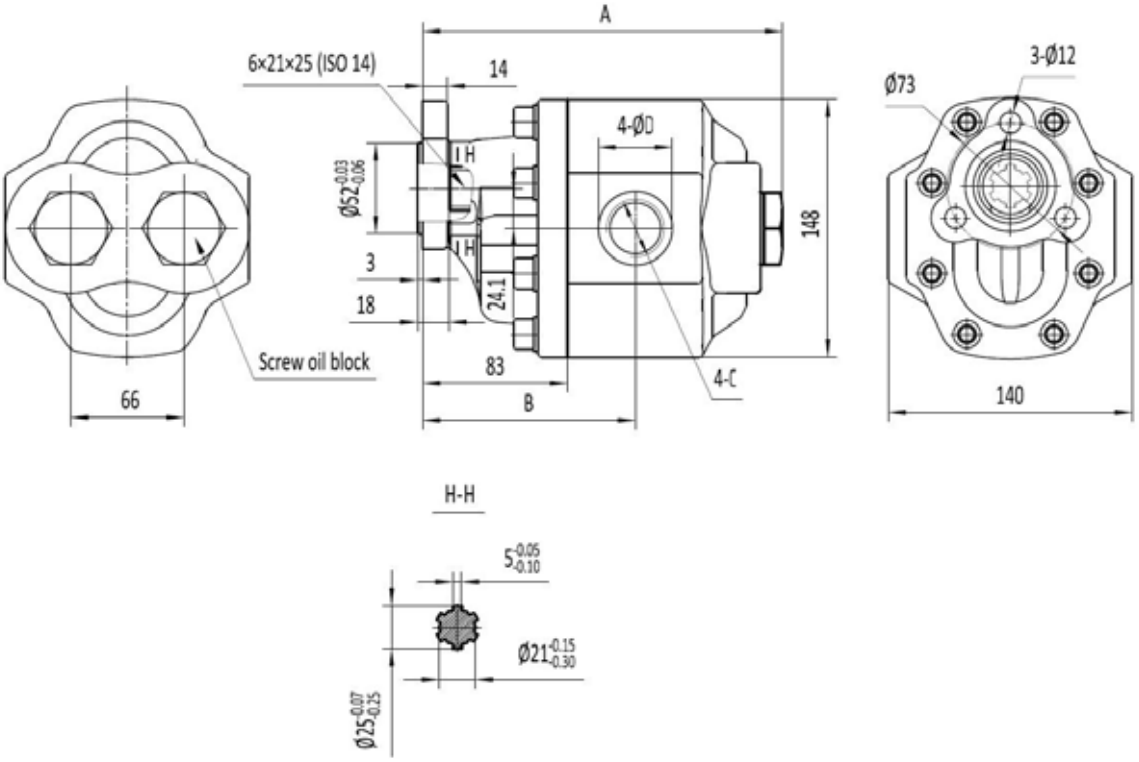

Type	Displacement	Max. pressure			Max. Continuous speed	Max. Intermittent speed	Min. speed	A	B	D	C	
		P1	P2	P3								
	(cm^3/r)	bar	bar	bar	(r/min)	(r/min)	(r/min)	mm	mm	mm	Inlet	Outlet
CBLH-R-20-F3	20	250	280	315	2000	2500	500	178	108	36	G3/4	G3/4
CBLH-R-30-F3	30	250	280	315	2000	2500	500	184	111	36	G3/4	G3/4
CBLH-R-40-F3	40	250	280	315	2000	2500	500	187	117	42.5	G3/4	G3/4
CBLH-R-50-F3	50	250	280	315	2000	2500	500	191	117	42.5	G1	G1
CBLH-R-63-F3	63	230	250	280	2000	2500	500	199	118	42.5	G1	G1
CBLH-R-80-F3	80	230	250	280	2000	2500	500	206	122	42.5	G1	G1

Group 30 gear pump CBLH series

FRONT COVER

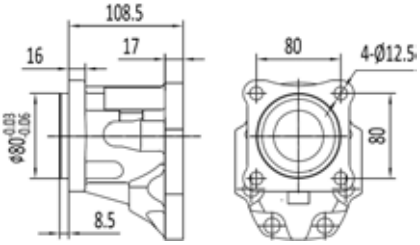

F1

SHAFTS

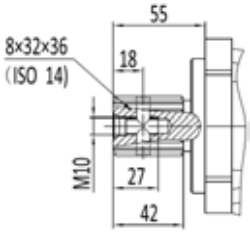

H8

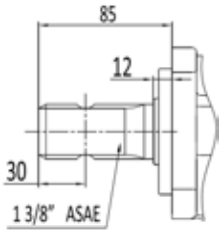

S0

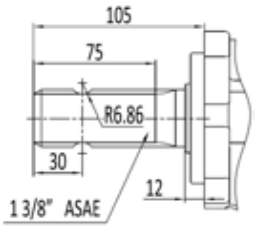

S1

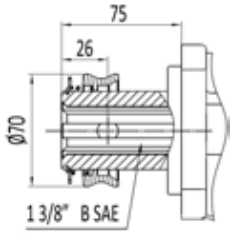

S2

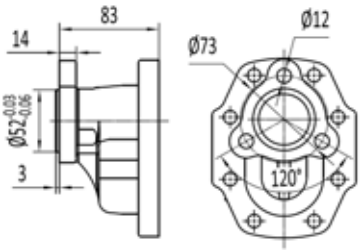

F3

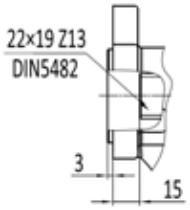

H0

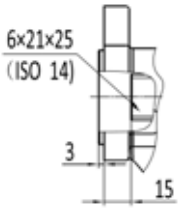

H1

Group 30 gear pump CBLH series

PORTS

L0/L1

Type	Ports code	Inlet		Outlet	
		D	C	D	C
CBLH-*-20～CBLH-*-40	L0	36	G 3/4	36	G 3/4
CBLH-*-50～CBLH-*-82	L1	42.5	G 1	42.5	G 1

Remark: please contact us for more inlet/outlet specifications .

PORTS POSITION

A0

A1

A2

A3

B0

B1

B2

B3

C0

Group 35 gear pump CBMH series

HOW TO ORDER

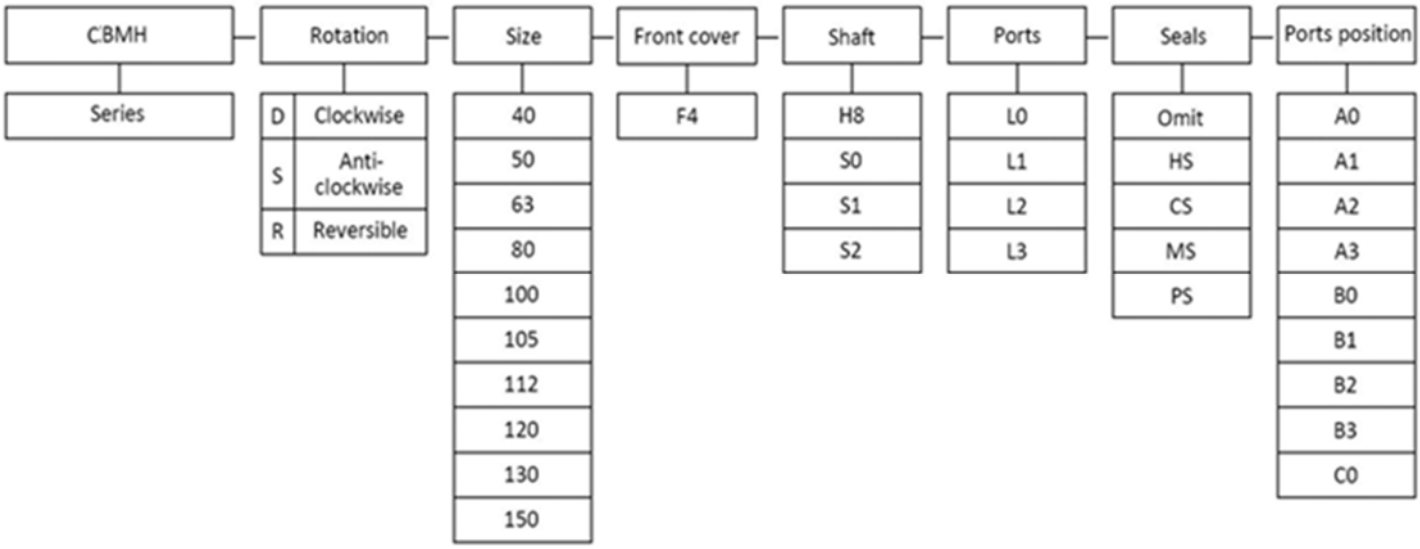

Seals

Omit - Range between -10℃and +80℃， inlet pressure up to max. 3 bar absolute (standard seal) .

HS - Version suitable for fluid at hi-temperatures , range between -10℃and +120℃ .

CS - Version suitable for fluid at low-temperatures , range between -40℃and +80℃ .

MS - Version suitable for inlet pressure up to max. 3 and 6 bar absolute .

PS - Version suitable for inlet pressure up to max. 3 and 10 bar absolute .

Ports position

A0 - Two ports , one side inlet and one side outlet .

A1 - Two ports , one side inlet and one back outlet .

A2 - Two ports , one back inlet and one side outlet .

A3 - Two ports , one back inlet and one back outlet .

B0 - Three ports , one side inlet , one side outlet and one back outlet .

B1 - Three ports , one side inlet , one back inlet and one side outlet .

B2 - Three ports , one side inlet , one back inlet and one back outlet .

B3 - Three ports , one back inlet , one side outlet and one back outlet .

C0 - Four ports , one side inlet ,one back inlet ,one side outlet and one back outlet .

Remark : Due to installation distance limitation and working allowance , “L3” only suitable for “A0” Ports position .

Examples

CBMH-R-100-F4H8L2-C0 = CBMH series , Reversible , 100 cc/rev , F4 front cover , H8 shaft , L2 ports ,C0 ports position .

Group 35 gear pump 4 holes ISO CBMH series

- ★ Two pieces housing in robust cast iron material .
- ★ Auto-compensated by thrust plate .
- ★ High sustained working pressure and long life .
- ★ Anti-contamination .
- ★ From medium to heavy duty applications .

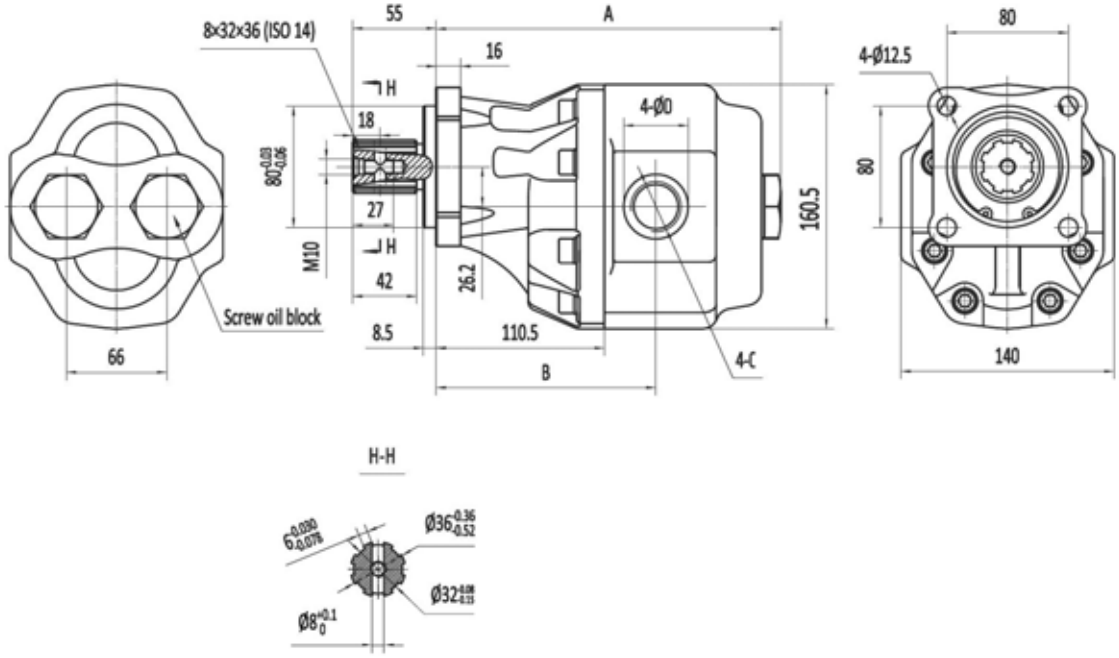

Type	Displacement	Max. pressure			Max. Continuous speed	Max. Intermittent speed	Min. speed	A	B	D	C	
		P1	P2	P3								
	(cm^3/r)	bar	bar	bar	(r/min)	(r/min)	(r/min)	mm	mm	mm	Inlet	Outlet
CBMH-R-40-F4	40	250	280	315	2000	2500	500	201	135	36	G3/4	G3/4
CBMH-R-50-F4	50	250	280	315	2000	2500	500	207	136	42.5	G1	G1
CBMH-R-63-F4	63	250	280	315	2000	2500	500	212	139	42.5	G1	G1
CBMH-R-80-F4	80	230	250	280	2000	2500	500	223	144	42.5	G1	G1
CBMH-R-100-F4	100	210	225	240	2000	2500	500	226	154	56	G11/4	G11/4
CBMH-R-105-F4	105	180	195	210	1800	2000	500	237	157	56	G11/4	G11/4
CBMH-R-110-F4	110	180	195	210	1800	2000	500	242	162	56	G11/4	G11/4
CBMH-R-120-F4	120	160	180	200	1800	2000	500	246	166	56	G11/4	G11/4
CBMH-R-130-F4	130	180	190	200	1500	1800	500	239	170	62	G11/2	G11/2
CBMH-R-150-F4	150	170	180	190	1500	1800	500	249	180	62	G11/2	G11/2

Group 35 gear pump CBMH series

FRONT COVER

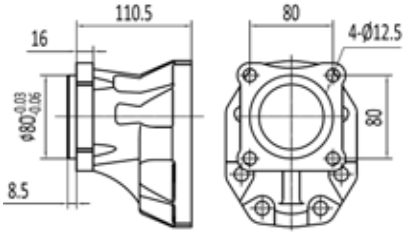

F4

SHAFTS

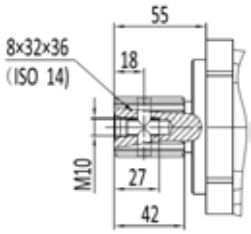

H8

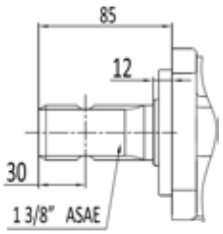

S0

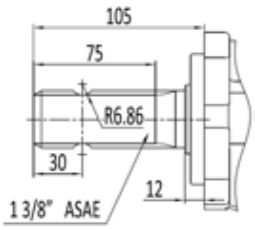

S1

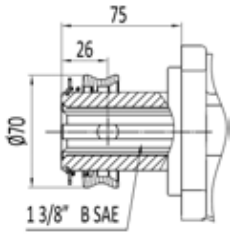

S2

PORTS

L0/L1/L2/L3

Type	Ports code	Inlet		Outlet	
		D	C	D	C
CBMH-*-20～CBMH-*-40	L0	36	G 3/4	36	G 3/4
CBMH-*-50～CBMH-*-80	L1	42.5	G 1	42.5	G 1
CBMH-*-100～CBMH-*-120	L2	56	G1 1/4	56	G1 1/4
CBMH-*-130～CBMH-*-150	L3	62	G1 1/2	62	G1 1/2

Remark: please contact us for more inlet/outlet specifications .

Group 35 gear pump CBMH series

PORTS POSITION

A0

A1

A2

A3

B0

B1

B2

B3

C0

Group 40 gear pump CBGH series

HOW TO ORDER

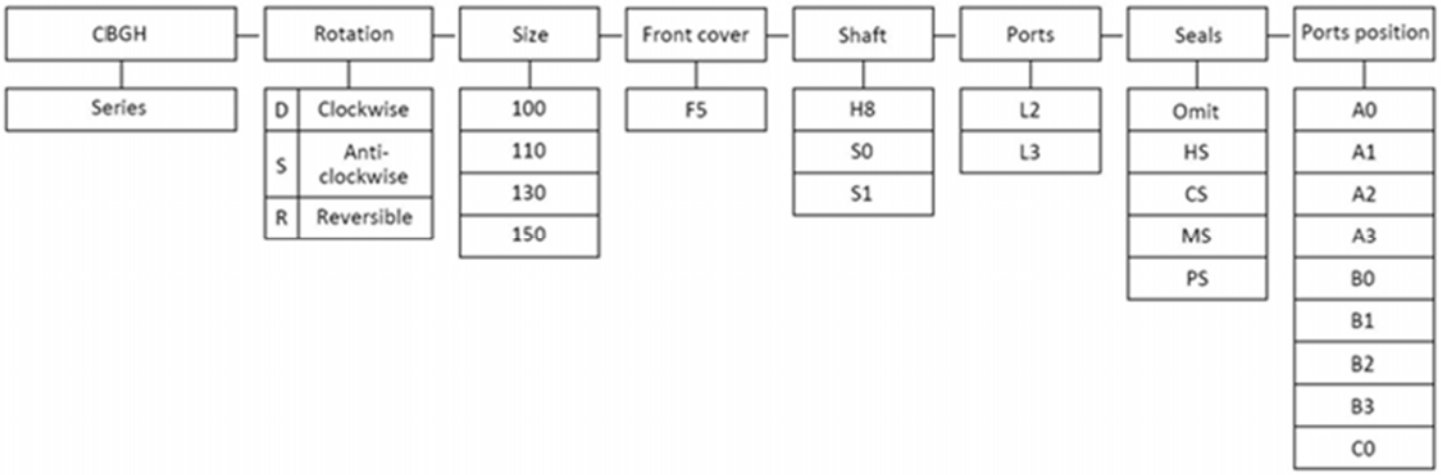

Seals

Omit - Range between -10℃and +80℃， inlet pressure up to max. 3 bar absolute (standard seal) .

HS - Version suitable for fluid at hi-temperatures , range between -10℃and +120℃ .

CS - Version suitable for fluid at low-temperatures , range between -40℃and +80℃ .

MS - Version suitable for inlet pressure up to max. 3 and 6 bar absolute .

PS - Version suitable for inlet pressure up to max. 3 and 10 bar absolute .

Ports position

A0 - Two ports , one side inlet and one side outlet .

A1 - Two ports , one side inlet and one back outlet .

A2 - Two ports , one back inlet and one side outlet .

A3 - Two ports , one back inlet and one back outlet .

B0 - Three ports , one side inlet , one side outlet and one back outlet .

B1 - Three ports , one side inlet , one back inlet and one side outlet .

B2 - Three ports , one side inlet , one back inlet and one back outlet .

B3 - Three ports , one back inlet , one side outlet and one back outlet .

C0 - Four ports , one side inlet ,one back inlet ,one side outlet and one back outlet .

Remark : Due to installation distance limitation and working allowance , “L3” only suitable for “A0” Ports position .

Examples

CBGH-R-150-F5H8L3-A0 = CBGH series , Reversible , 150 cc/rev , F5 front cover , H8 shaft , L3 ports ,A0 ports position

Group 40 gear pump 4 holes ISO CBGH series

- ★ Two pieces housing in robust cast iron material .
- ★ Auto-compensated by thrust plate .
- ★ High sustained working pressure and long life .
- ★ Anti-contamination .
- ★ For heavy duty applications .

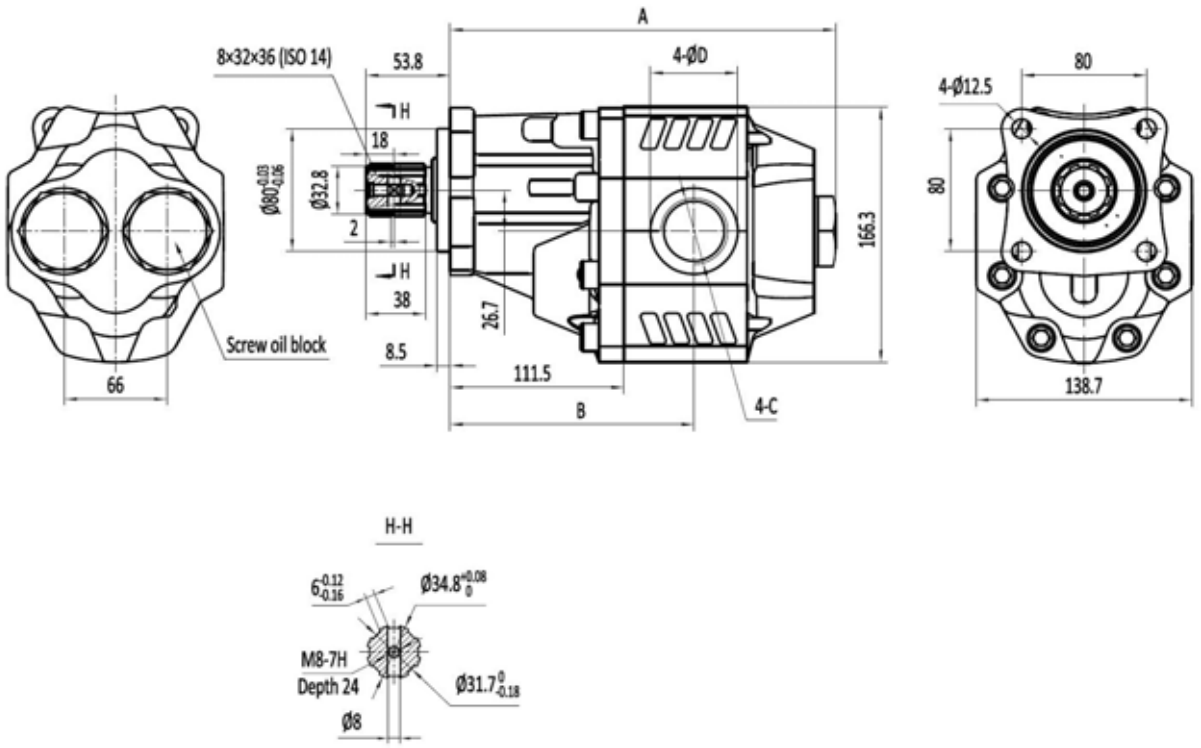

Type	Displacement	Max. pressure			Max. Continuous speed	Max. Intermittent speed	Min. speed	A	B	D	C	
		P1	P2	P3								
	(cm^3/r)	bar	bar	bar	(r/min)	(r/min)	(r/min)	mm	mm	mm	Inlet	Outlet
CBGH-R-100-F5	100	280	315	350	2000	2500	500	243	156.5	56	G11/4	G11/4
CBGH-R-110-F5	110	250	280	315	2000	2500	500	248	161.5	56	G11/4	G11/4
CBGH-R-130-F5	130	230	250	280	1800	2000	500	257	168	62	G11/2	G11/2
CBGH-R-150-F5	150	210	225	240	1500	1800	500	268	176.5	62	G11/2	G11/2

Group 40 gear pump CBGH series

FRONT COVER

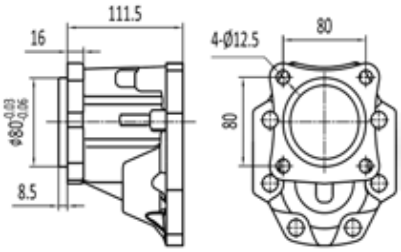

F5

SHAFTS

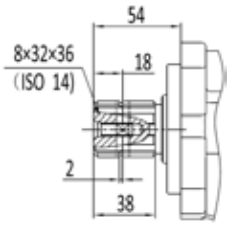

H8

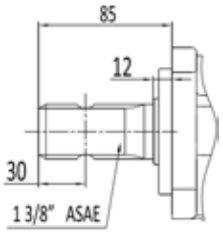

S0

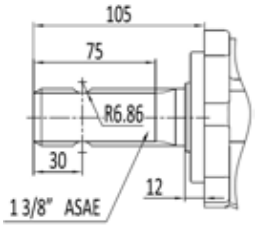

S1

PORTS

L2/L3

Type	Ports code	Inlet		Outlet	
		D	C	D	C
CBGH-*-100～CBGH-*-110	L2	56	G1 1/4	56	G1 1/4
CBGH-*-130～CBGH-*-150	L3	62	G 1 1/2	62	G 1 1/2

Remark: please contact us for more inlet/outlet specifications .

PORTS POSITION

A0

A1

A2

A3

B0

B1

B2

B3

C0

Gear pump[motor] CBFP/CMFP series

HOW TO ORDER

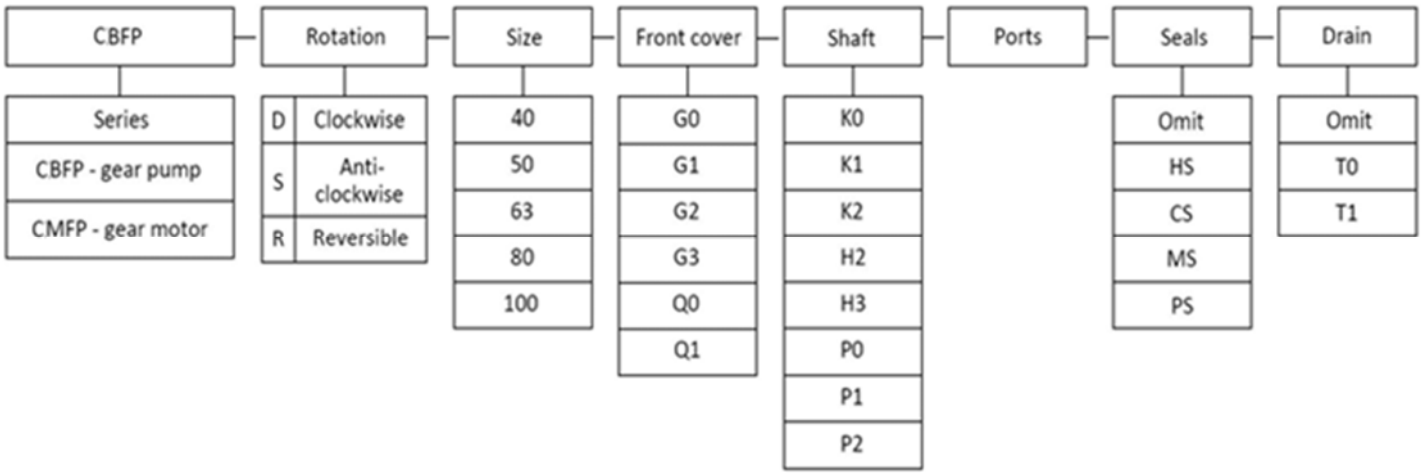

Seals

Omit - Range between -10℃and +80℃， inlet pressure up to max. 3 bar absolute (standard seal) .

HS - Version suitable for fluid at hi-temperatures , range between -10℃and +120℃ .

CS - Version suitable for fluid at low-temperatures , range between -40℃and +80℃ .

MS - Version suitable for inlet pressure up to max. 3 and 6 bar absolute .

PS - Version suitable for inlet pressure up to max. 3 and 10 bar absolute .

Drain

Omit - Have no drain .

T0 - External drain 1/4-18 NPT .

T1 - External drain M14×1.5 .

Examples

CBFP-D-63-G0K0E1 = CBFP series , Clockwise , 63 cc/rev , G0 front cover , K0 shaft , E1 ports .

Gear pump CBFP series

- ★ Two pieces housing in robust cast iron material .
- ★ Auto-compensated by thrust plate .
- ★ High sustained working pressure and long life .
- ★ Anti-contamination .
- ★ For heavy duty applications .

OUTLET **INLET**

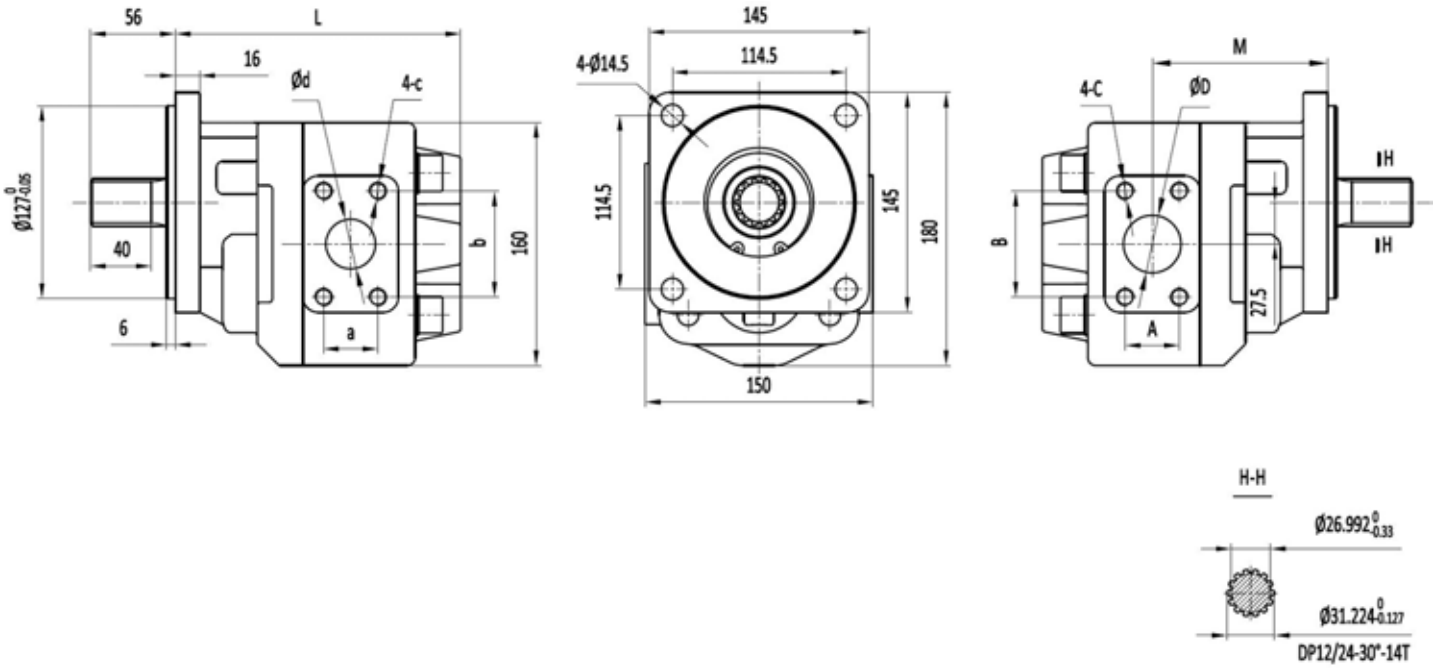

Type	Displacement	Max. pressure			Max. speed	Min. speed	L	M	INLET				OUTLET			
		P1	P2	P3					A	B	C	D	a	b	c	d
	(cm^3/r)	bar	bar	bar	(r/min)	(r/min)	mm	mm	mm	mm	mm		mm	mm	mm	
CBFP-D-40-G0	40	230	250	280	2500	500	173	113.7	26.2	52.4	M10	25.4	22.3	47.6	M10	19.1
CBFP-D-50-G0	50	230	250	280	2500	500	177	116	26.2	52.4	M10	25.4	22.3	47.6	M10	19.1
CBFP-D-63-G0	63	230	250	280	2500	500	183	123	30.2	58.7	M10	31.8	26.2	52.4	M10	25.4
CBFP-D-80-G0	80	210	230	250	2500	500	191	123.5	35.7	69.9	M12	38.1	30.2	58.7	M10	31.8
CBFP-D-100-G0	100	210	230	250	2500	500	203	135	35.7	69.9	M12	38.1	30.2	58.7	M10	31.8

Gear motor CMFP series

- ★ Two pieces housing in robust cast iron material .
- ★ Auto-compensated by thrust plate .
- ★ High sustained working pressure and long life .
- ★ Anti-contamination .
- ★ For heavy duty applications .

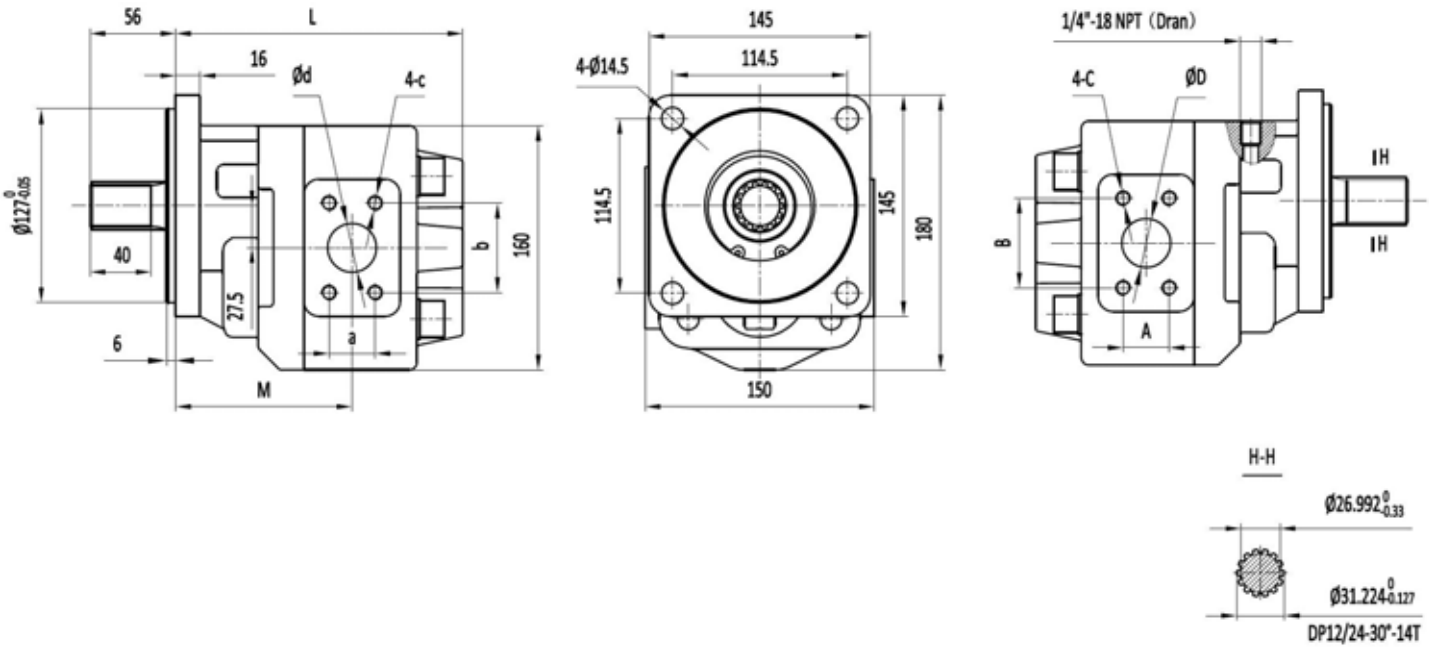

Type	Displacement	Max. pressure			Max. speed	Min. speed	L	M	INLET				OUTLET			
		P1	P2	P3					A	B	C	D	a	b	c	d
	(cm^3/r)	bar	bar	bar	(r/min)	(r/min)	mm	mm	mm	mm		mm	mm	mm		mm
CMFP-R-40G2-T0	40	230	250	280	2500	500	173	113.7	26.2	52.4	M10	25.4	26.2	52.4	M10	25.4
CMFP-R-50G2–T0	50	230	250	280	2500	500	177	116	30.2	58.7	M10	31.8	30.2	58.7	M10	31.8
CMFP-R-63G2–T0	63	230	250	280	2500	500	183	123	30.2	58.7	M10	31.8	30.2	58.7	M10	31.8
CMFP-R-80G2–T0	80	210	230	250	2500	500	191	123.5	35.7	69.9	M12	38.1	35.7	69.9	M12	38.1
CMFP-R-100G2–T0	100	210	230	250	2500	500	203	135	35.7	69.9	M12	38.1	35.7	69.9	M12	38.1

FRONT COVER

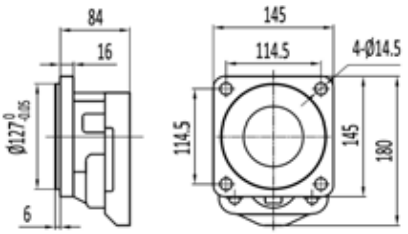

G0

SHAFTS

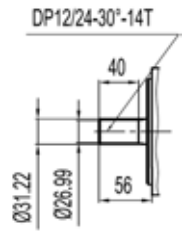

K0

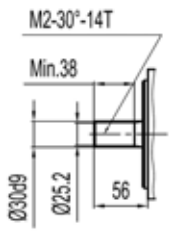

K1

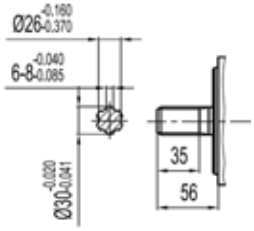

H2

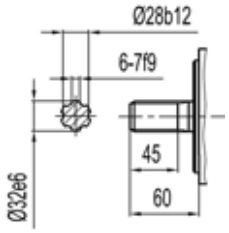

H3

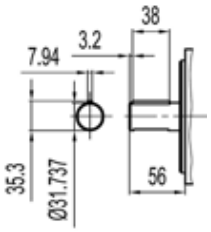

P0

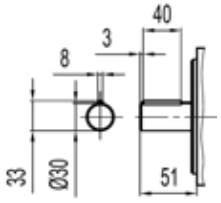

P1

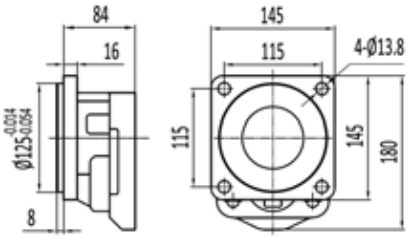

G1

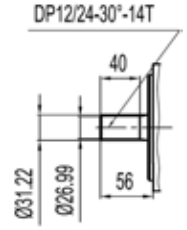

K0

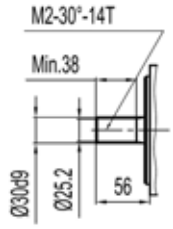

K1

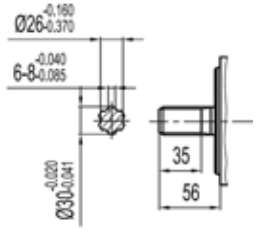

H2

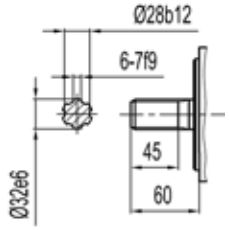

H3

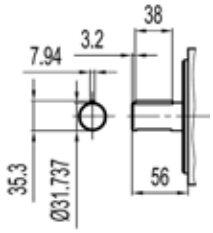

P0

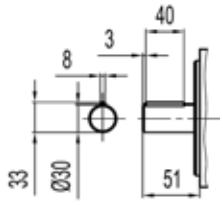

P1

Gear pump[motor] CBFP/CMFP series

FRONT COVER

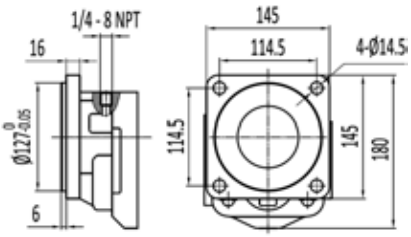

G2

SHAFTS

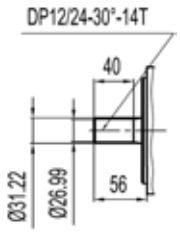

K0

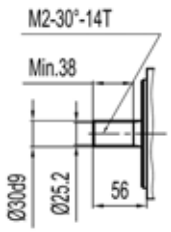

K1

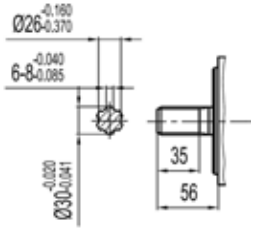

H2

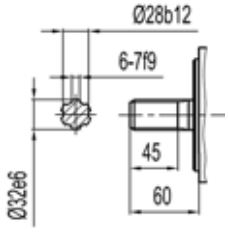

H3

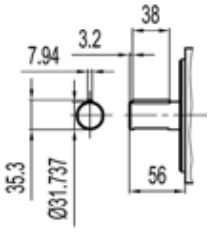

P0

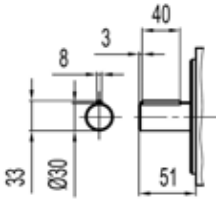

P1

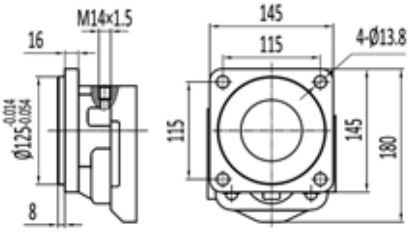

G3

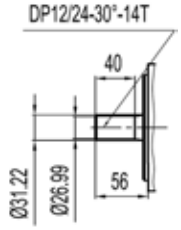

K0

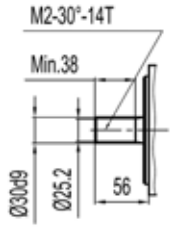

K1

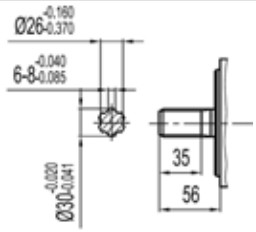

H2

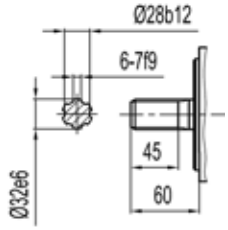

H3

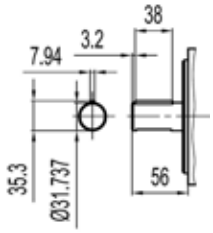

P0

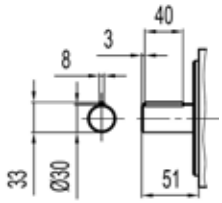

P1

Gear pump[motor] CBFP/CMFP series

FRONT COVER

SHAFTS

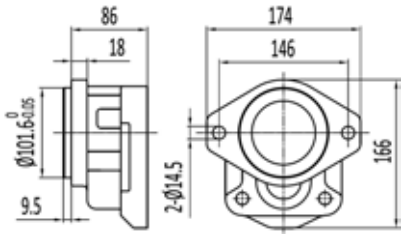

Q0

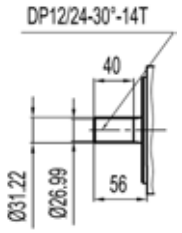

K0

K2

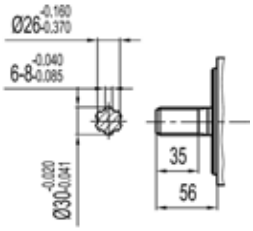

H2

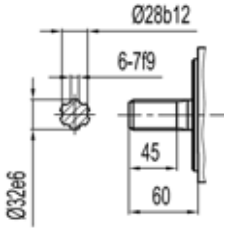

H3

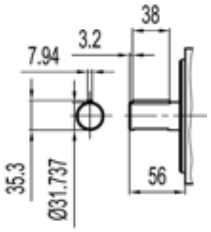

P0

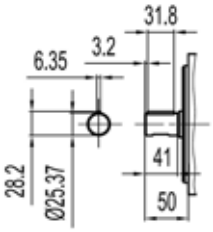

P2

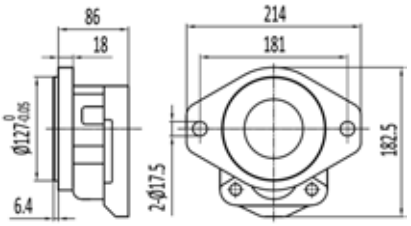

Q1

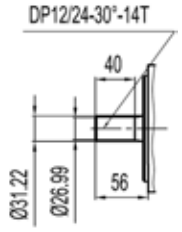

K0

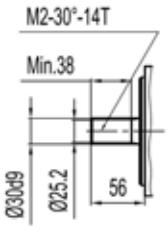

K1

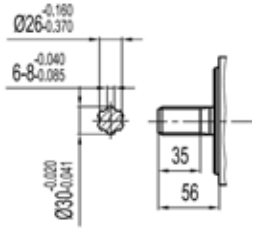

H2

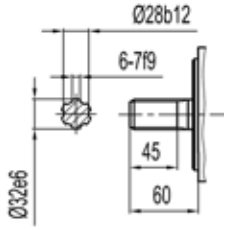

H3

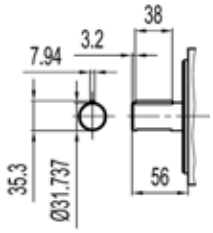

P0

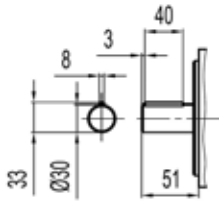

P1

Gear pump[motor] CBFP/CMFP series

PORTS

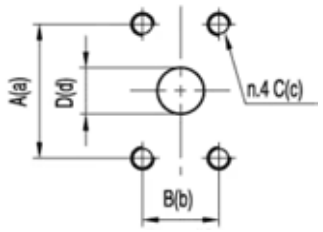

E0/E1/E2

TYPE	CODE	INLET				OUTLET			
		A	B	C	D	a	b	c	d
CBFP..40 ～ CBFP..50	E0	52.4	26.2	M10	25.4	47.6	22.3	M10	19.1
CBFP..63	E1	58.7	30.2	M10	31.8	52.4	26.2	M10	25.4
CBFP..80 ～ CBFP..100	E2	69.9	35.7	M12	38.1	58.7	30.2	M10	31.8

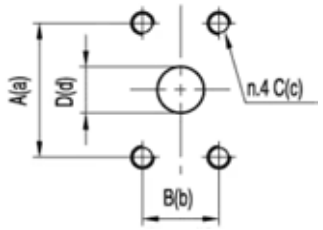

E3/E4

TYPE	CODE	INLET				OUTLET			
		A	B	C	D	a	b	c	d
CMFP..40 ～ CMFP..63	E3	52.4	26.2	M10	25.4	52.4	26.2	M10	25.4
CMFP..80 ～ CMFP..100	E4	58.7	30.2	M10	31.8	58.7	30.2	M10	31.8

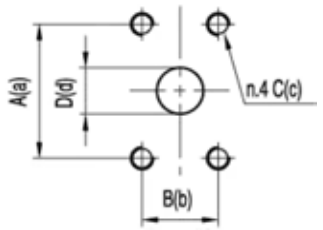

U0/U1/U2

TYPE	CODE	INLET				OUTLET			
		A	B	C	D	a	b	c	d
CBFP..40 ～ CBFP..50	U0	52.4	26.2	3/8-16UNC	25.4	47.6	22.3	3/8-16UNC	19.1
CBFP..63	U1	58.7	30.2	7/16-14UNC	31.8	52.4	26.2	3/816UNC	25.4
CBFP..80 ～ CBFP..100	U2	69.9	35.7	1/2-13UNC	38.1	58.7	30.2	7/16-14UNC	31.8

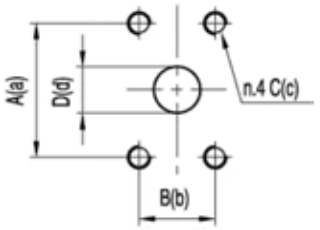

U3/U4

TYPE	CODE	INLET				OUTLET			
		A	B	C	D	a	b	c	d
CMFP..40 ～ CMFP..63	U3	52.4	26.2	3/8-16UNC	25.4	52.4	26.2	3/8-16UNC	25.4
CMFP..80 ～ CMFP..100	U4	58.7	30.2	7/16-14UNC	31.8	58.7	30.2	7/16-14UNC	31.8

Gear pump[motor] CBFP/CMFP series

PORTS

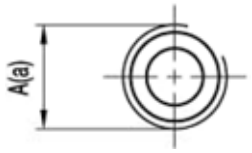

L5/L6/L7

TYPE	CODE	INLET	OUTLET
		A	a
CBFP..40	L5	G1	G3/4
CBFP..50 ～ CBFP..80	L6	G1 1/4	G1
CBFP100	L7	G1 1/2	G1 1/4

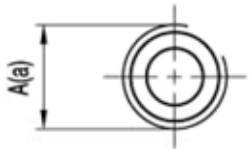

N0/N1/N2

TYPE	CODE	INLET	OUTLET
		A	a
CBFP..40	N0	NPT 1	NPT 3/4
CBFP..50 ～ CBFP..80	N1	NPT 1 1/4	NPT 1
CBFP100	N2	NPT 1 1/2	NPT 1 1/4

Remark: please contact us for more inlet/outlet specifications .

Gear pump[motor] CBHP/CMHP series

HOW TO ORDER

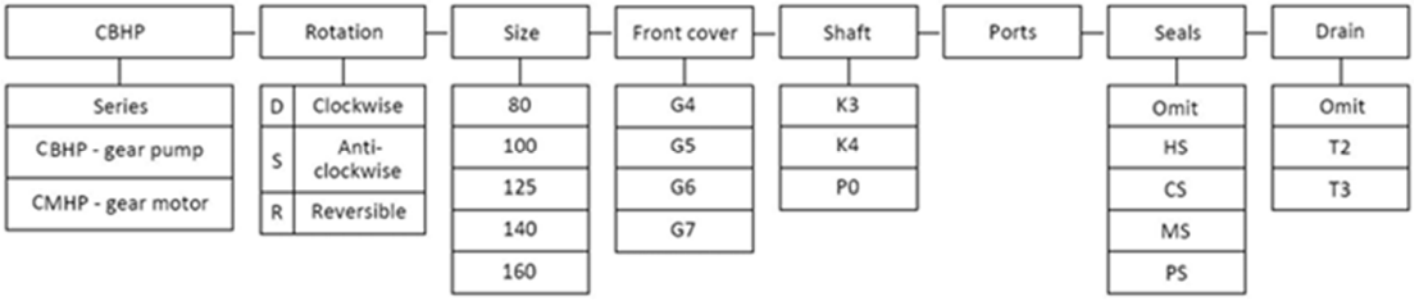

Seals

Omit - Range between -10℃and +80℃， inlet pressure up to max. 3 bar absolute (standard seal) .

HS - Version suitable for fluid at hi-temperatures , range between -10℃and +120℃ .

CS - Version suitable for fluid at low-temperatures , range between -40℃and +80℃ .

MS - Version suitable for inlet pressure up to max. 3 and 6 bar absolute .

PS - Version suitable for inlet pressure up to max. 3 and 10 bar absolute .

Drain

Omit - Have no drain .

T2 - External drain 7/16-20 UNF .

T3 - External drain M18×1.5 .

Examples

CBHP-D-100-G4K0E7 = CBFP series , Clockwise , 100 cc/rev , G4 front cover , K0 shaft , E7 ports .

Gear pump CBHP series

- ★ Two pieces housing in robust cast iron material .
- ★ Auto-compensated by thrust plate .
- ★ High sustained working pressure and long life .
- ★ Anti-contamination .
- ★ For heavy duty applications .

OUTLET **INLET**

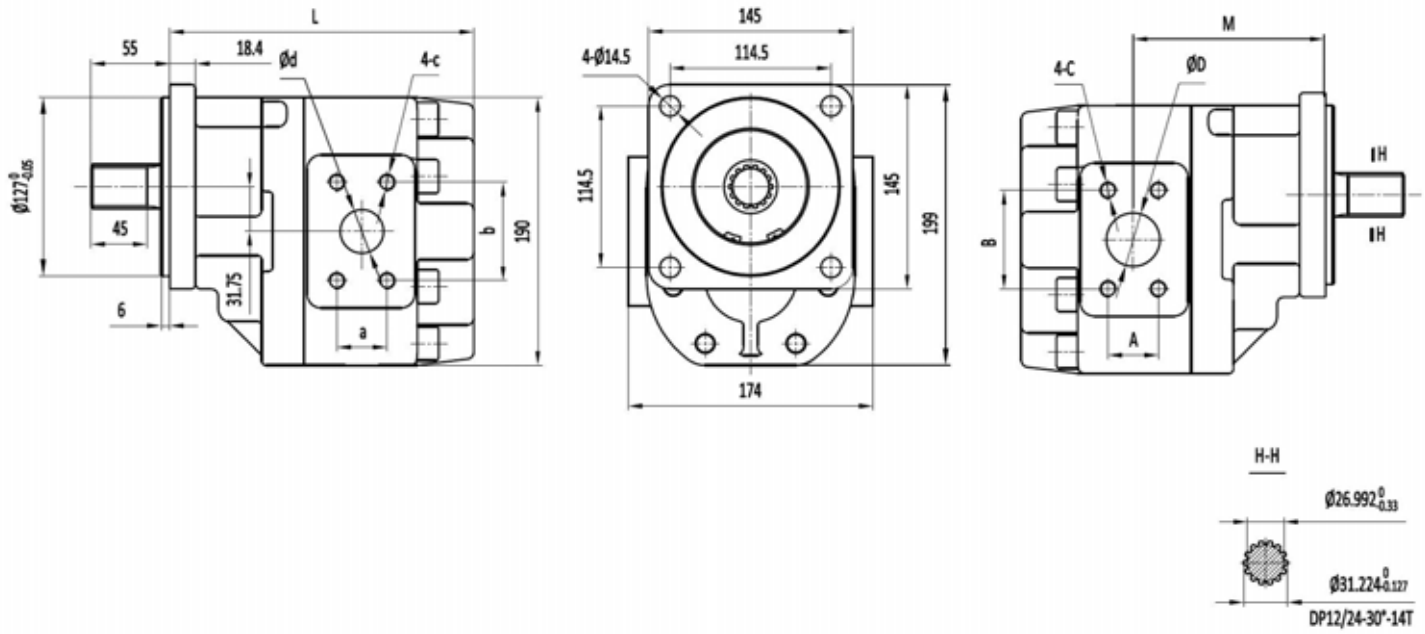

Type	Displacement	Max. pressure			Max. speed	Min. speed	L	M	INLET				OUTLET			
		P1	P2	P3					A	B	C	D	a	b	c	d
	(cm^3/r)	bar	bar	bar	(r/min)	(r/min)	mm	mm	mm	mm	mm		mm	mm	mm	
CBHP-D-80-G4	80	230	250	280	2200	600	200	120.5	35.7	69.9	M12	38.1	30.2	58.7	M10	31.8
CBHP-D-100-G4	100	230	250	280	2200	600	208	127.5	35.7	69.9	M12	38.1	30.2	58.7	M10	31.8
CBHP-D-125-G4	125	210	230	250	2200	600	219	131.5	42.9	77.8	M12	50.8	30.2	58.7	M10	31.8
CBHP-D-140-G4	140	210	230	250	2200	600	225	134	42.9	77.8	M12	50.8	30.2	58.7	M10	31.8
CBHP-D-160-G4	160	210	230	250	2200	600	233	139.5	42.9	77.8	M12	50.8	30.2	58.7	M10	31.8

Gear motor CMHP series

★ Two pieces housing in robust cast iron material .

★ Auto-compensated by thrust plate .

★ High sustained working pressure and long life .

★ Anti-contamination .

★ For heavy duty applications .

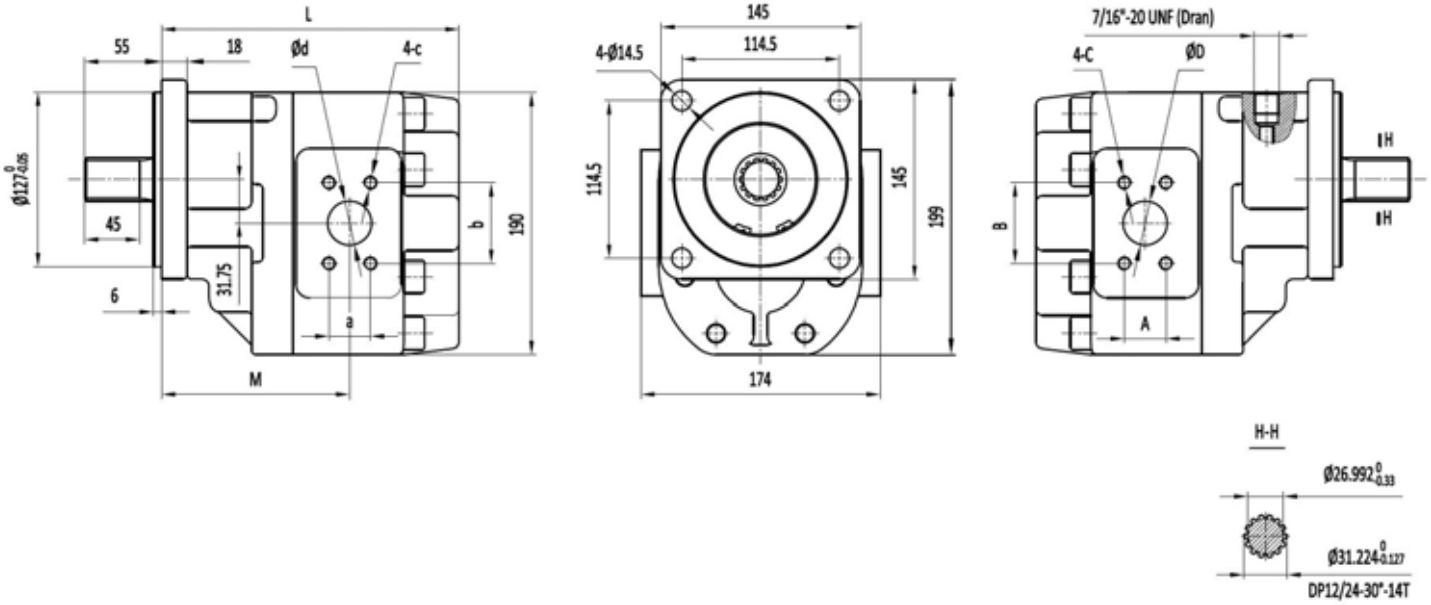

Type	Displacement	Max. pressure			Max. speed	Min. speed	L	M	INLET（OUTLET）							
		P1	P2	P3					A	B	C	D	a	b	c	d
	(cm^3/r)	bar	bar	bar	(r/min)	(r/min)	mm	mm	mm	mm	mm		mm	mm	mm	
CMHP-D-80-G6-T2	80	230	250	280	2200	600	200	120.5	30.2	58.7	M10	31.8	30.2	58.7	M10	31.8
CMHP-D-100-G6-T2	100	230	250	280	2200	600	208	127.5	30.2	58.7	M10	31.8	30.2	58.7	M10	31.8
CMHP-D-125-G6-T2	125	210	230	250	2200	600	219	131.5	35.7	69.9	M12	38.1	30.2	58.7	M10	31.8
CMHP-D-140-G6-T2	140	210	230	250	2200	600	225	134	35.7	69.9	M12	38.1	30.2	58.7	M10	31.8
CMHP-D-160-G6T2	160	210	230	250	2200	600	233	139.5	42.9	77.8	M12	50.8	42.9	77.8	M12	50.8

Gear pump[motor] CBHP/CMHP series

FRONT COVER SHAFTS

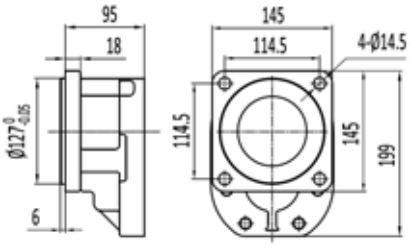

G4

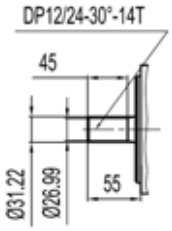

K3

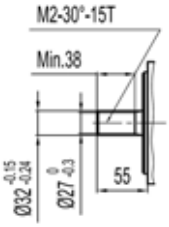

K4

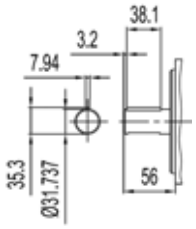

P0

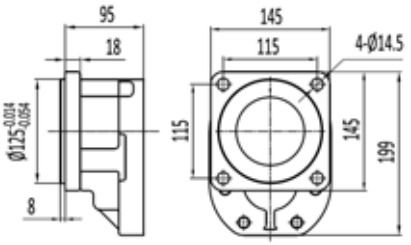

G5

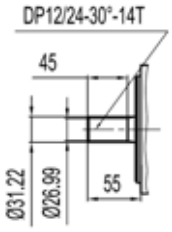

K3

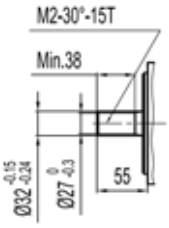

K4

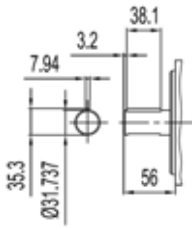

P0

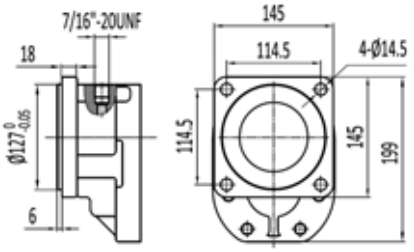

G6

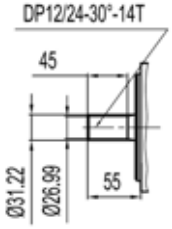

K3

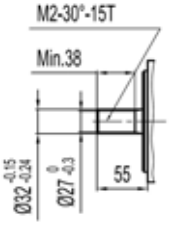

K4

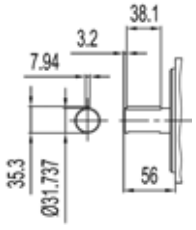

P0

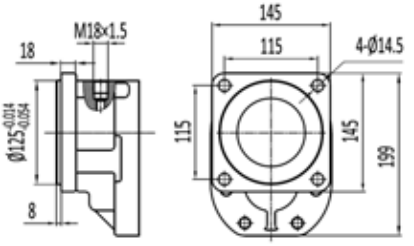

G7

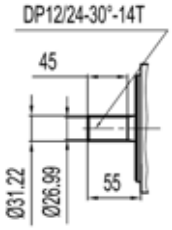

K3

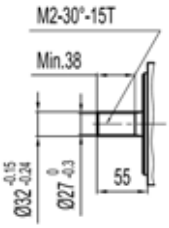

K4

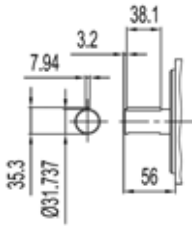

P0

Gear pump[motor] CBHP/CMHP series

PORTS

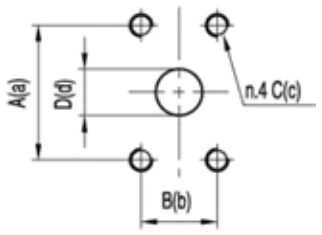

E0/E1/E2

TYPE	CODE	INLET				OUTLET			
		A	B	C	D	a	b	c	d
CBHP..80 ～ CBHP..100	E2	69.9	35.7	M12	38.1	58.7	30.2	M10	31.8
CBHP..125 ～ CBHP..160	E5	77.8	42.9	M12	50.8	58.7	30.2	M10	31.8

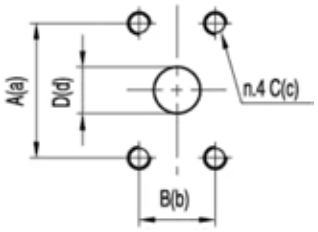

E4/E6/E7

TYPE	CODE	INLET				OUTLET			
		A	B	C	D	a	b	c	d
CMHP..80 ～ CMHP..100	E4	58.7	30.2	M10	31.8	58.7	30.2	M10	31.8
CMHP..125 ～ CMHP..140	E6	69.9	35.7	M12	38.1	69.9	35.7	M12	38.1
CMHP..160	E7	77.8	42.9	M12	50.8	77.8	42.9	M12	50.8

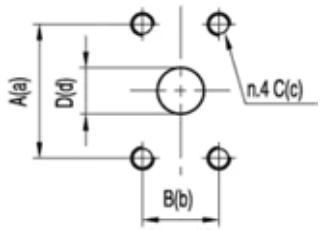

U2/U5

TYPE	CODE	INLET				OUTLET			
		A	B	C	D	a	b	c	d
CBHP..80 ～ CBHP..100	U2	69.9	35.7	1/2-13UNC	38.1	58.7	30.2	7/16-14UNC	31.8
CBHP..125 ～ CBHP..160	U5	77.8	42.9	1/2-13UNC	50.8	58.7	30.2	7/16-14UNC	31.8

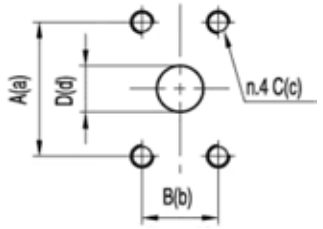

U4/U6/U7

TYPE	CODE	INLET				OUTLET			
		A	B	C	D	a	b	c	d
CMHP..80 ～ CMHP..100	U4	58.7	30.2	3/8-16UNC	31.8	58.7	30.2	3/8-16UNC	31.8
CMHP..125 ～ CMHP..140	U6	69.9	35.7	7/16-14UNC	38.1	69.9	35.7	3/816UNC	38.1
CMHP..160	U7	77.8	42.9	1/2-13UNC	50.8	77.8	42.9	7/16-14UNC	50.8

Remark: please contact us for more inlet/outlet specifications .

SCATOLE INGRANAGGI

Hydraulic Pump Aluminum

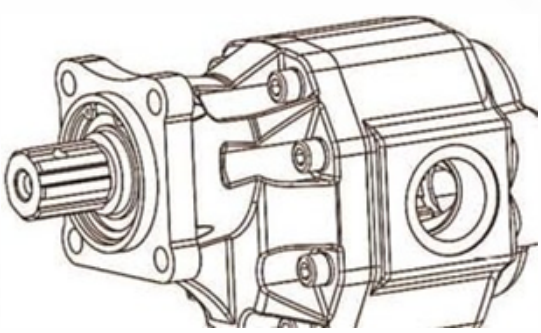

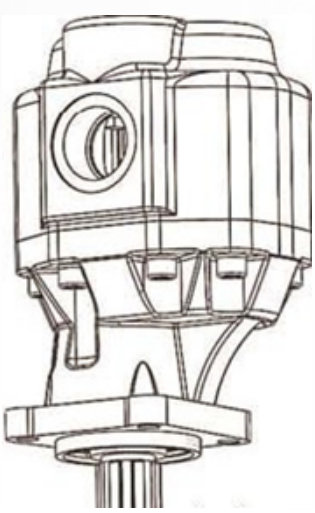

CMR AGRICULTURE

PRODUCT STRUCTURE

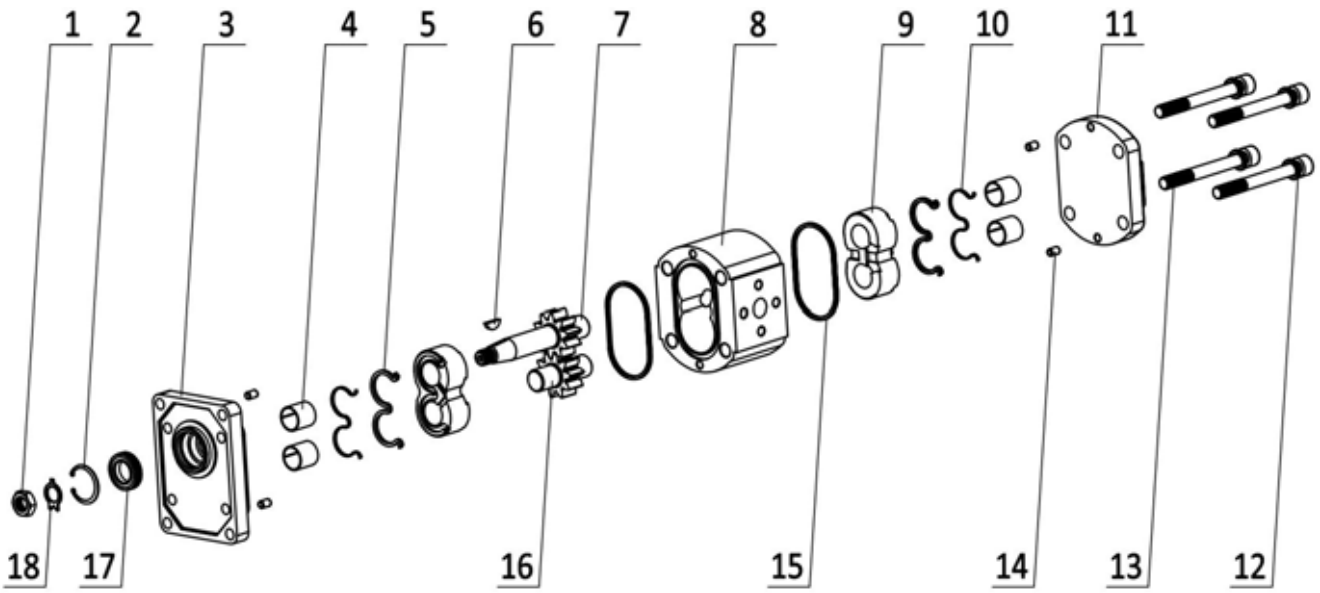

(No.)	(Description)	(Quantity)
1	Nut	1
2	Stop ring	1
3	Front cover	1
4	DU bearing	4
5	W type seal	2
6	Key	1
7	Drive gear	1
8	Body	1
9	Bushing	2
10	W type retaining ring	2
11	End cover	1
12	Spring washer	4
13	Bolt	4
14	Centering pin	4
15	Housing seal	2
16	Driven gear	1
17	Shaft seal	1
18	Lock gasket	1

TECHNICAL INFORMATION

INSTALLATION NOTES

Before starting the system on a continuous basis , we suggest to adopt as follows simple precautions .

- Check for the direction of rotation of the pump to be consistent with the drive shaft one , be sure no reversion revolved .
- Check for the proper alignment of pump shaft and motor shaft , it is necessary that the connection does not induce axial or radial loads .
- Check if contact area between seal ring and shaft is clean , remove all dirt , chips and all foreign Bodies form flanges connecting inlet and delivery ports , dust could provoke quicker wear and leakage .
- Ensure that intake and return pipes ends are always below fluid level and as far from each other as Possible .
- Fill the pump with fluid , and turn it by hand .
- Disconnect pump drain during startup to bleed air off the circuit .
- Always avoid or limit load starting for pump longer life .

RATATION DIRECTION

Definition of rotation direction : when standing before the pump with driving shaft up with its projecting end towards the observer , the pump is rotating clockwise in case of right-hand rotation “C” , The contrary will happen with left-hand pumps “S” , keeping the same point of view .

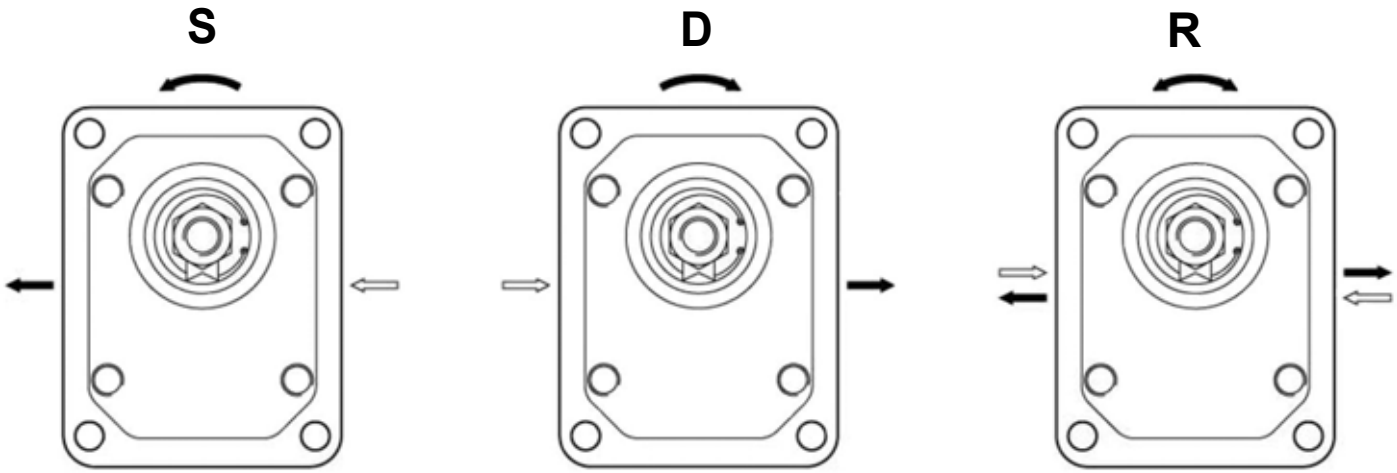

S=Anti-clockwise D=Clockwise R=Reversible

INLET PRESSURE

Under standard working conditions , intake pipe pressure is lower than atmospheric pressure . the operating inlet pressure should range between 0.7 and 3 bars (absolute) .

HYDRAULIC FLUIDS

Use specific mineral oil based hydraulic fluids having good antioxidant , anti-foaming (rapid deaeration) , anti-wear , anti--corrosion , and lubricating properties , Fluids should also comply with DIN 51525 and VDMA 24317 standards and get through 11th stage of FZG test . For the standard models , the temperature of the fluid should range between -10℃ and 80℃ .

Fluid kinematic viscosity ranges are the following :

Allowed range	6～500cSt
Recommended range	10～100cSt
Value allowed at startup	～2000cSt

FILTER RECOMMENDATION

It is widely known that most pumps early failures are due to contaminated fluids , As a warranty can't be issued for dirt-related wear , we recommend a filter to be used , which can reduce the degree of contamination to a permissible dimension in terms of the size and concentration of dirt particles .

The filtering system shall always ensure contamination levels not exceeding the values indicated below .

Pressure	<140 bar	140～210 bar	>210 bar
NAS 1638 Class	10	9	8
ISO 4406 Class	19/16	18/15	17/14
Ratio βx=75	25～40 mμ	12～15 mμ	6～12 mμ

INLET AND DELIVERY LINES

Hydraulic system pipes should show no sudden changes of direction , sharp bends and sudden differences in cross-section . They should not be too long or out of proportion .

Pipe cross-section should be sized so that fluid velocity does not exceed recommended values .

It is advisable to carefully consider the possible diameter reduction of the inlet or outlet pipes fitted on flange fittings . Reference values are the following .

Intake line	0.5～1.6 m/s
Delivery line	2～6 m/s
Return line	1.6～3 m/s

PRESSURE DEFINITION

P3 = Peak max.pressure
P2 = Intermittent max.pressure
P1 = Continuous max.pressure

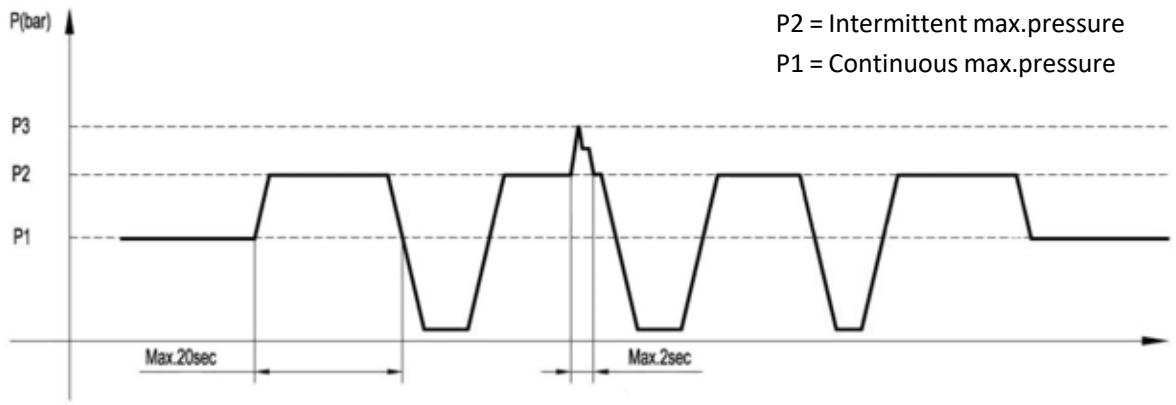

DESIGN CALCULATIONS FOR PUMP

Flow	Q	L/min
Torque	M	Nm
Power	P	kW
Speed	n	r/min
Pressure	△P	bar
Displacement	V	cm^3 /rev

Volumetric efficiency	ηv	≈0.93
Mechanical efficiency	ηhm	≈0.85
Total efficiency	$\eta t = \eta v \cdot \eta hm$	≈0.80

$Q = V \cdot n \cdot \eta v \cdot 10^{-3}$ [L/min]
$M = (\triangle P \cdot V)/(62.83 \cdot \eta hm)$ [Nm]
$P = (\triangle P \cdot Q)/(612 \cdot \eta t)$ [kW]

HOW TO ORDER

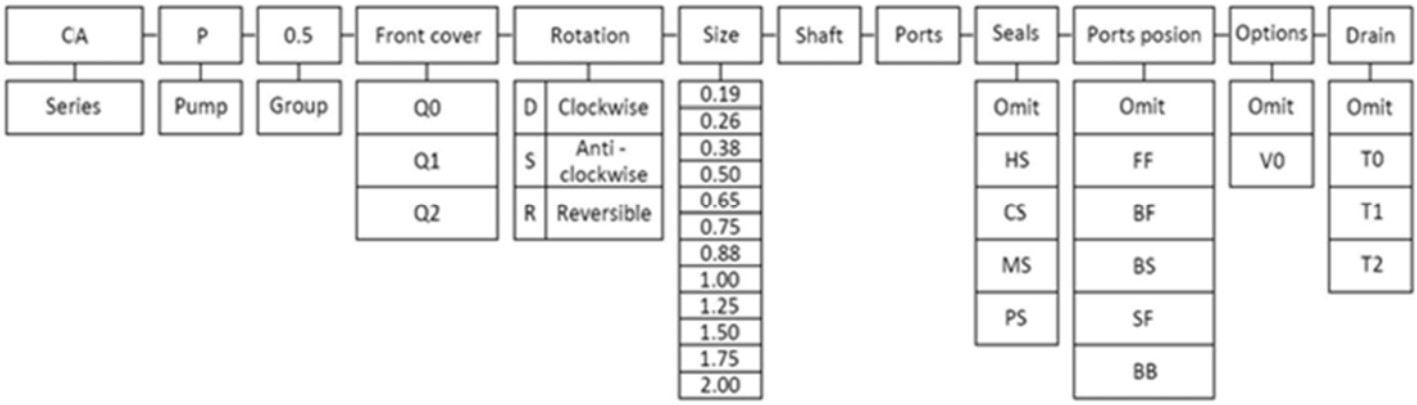

Seals

Omit - Range between -10℃and +80℃， inlet pressure up to max. 3 bar absolute (standard seal) .

HS - Version suitable for fluid at hi-temperatures , range between -10℃and +120℃ .

CS - Version suitable for fluid at low-temperatures , range between -40℃and +80℃ .

MS - Version suitable for inlet pressure up to max. 3 and 6 bar absolute .

PS - Version suitable for inlet pressure up to max. 3 and 10 bar absolute .

Ports position

Omit - Side inlet and side outlet .

FF - Front inlet and front outlet .

BF - Back inlet and front outlet .

BS - Back inlet and side outlet .

SF - Side inlet and front outlet .

BB - Back inlet and back outlet .

Options

Omit - Have no valves .

V0 - Directional valves .

Drain

Omit - Have no drain .

T0 - Internal drain .

T1 - External drain Φ5.

T2 - External drain G1/8 .

Examples

CAP0.5Q0-D-0.50B0G0-BF = CA series , 0.5 group pump , Q0 front cover , Clockwise , 0.50 cc/rev , B0 shaft , G0 ports , standard seal , back inlet and front outlet .

CAP0.5Q0

- ★ Use axial gap automatic compensation mechanism.
- ★ High sustained working pressure and long service life .
- ★ Anti fouling ability is strong and suitable for power units, machines and other kinds Of hydraulic systems .

INLET **OUTLET**

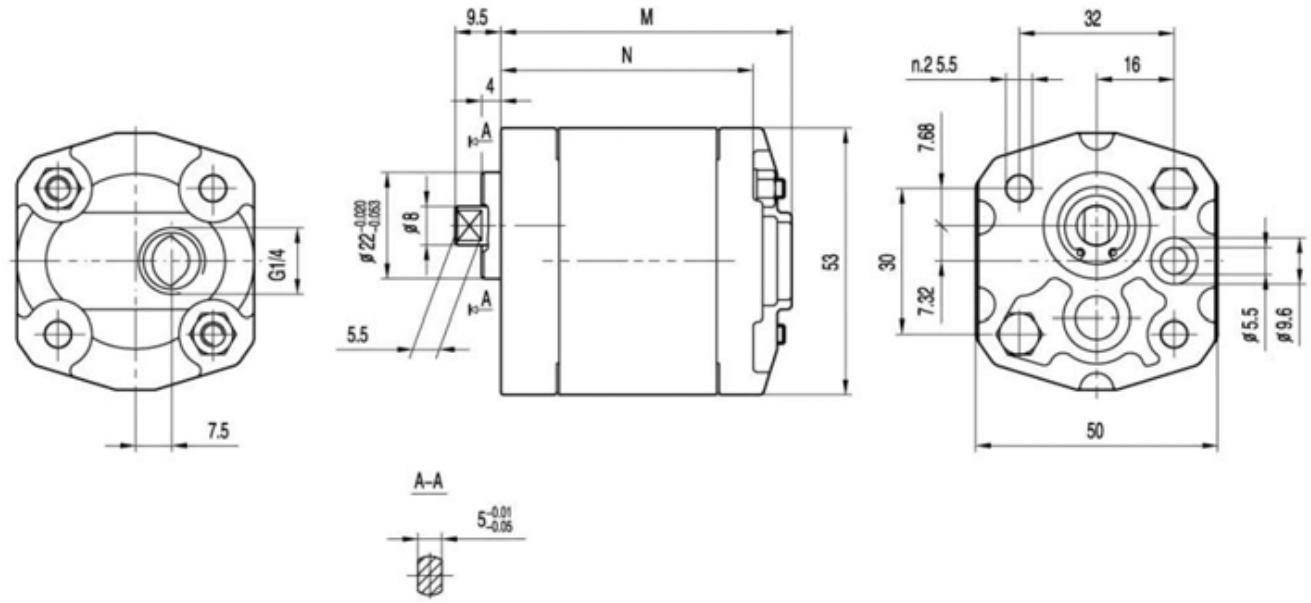

Type	Displacement	Max. pressure			Max. speed	Min. speed	Dimensions	
		P1	P2	P3			N	M
	(cm^3/rev)	bar	bar	bar	(r/min)	(r/min)	mm	mm
CAP0.5Q0-D-0.19	0.19	200	225	250	7000	1000	51	60
CAP0.5Q0-D-0.26	0.26	200	225	250	7000	1000	51.5	60.5
CAP0.5Q0-D-0.38	0.38	200	225	250	7000	1000	52.5	61.5
CAP0.5Q0-D-0.50	0.50	200	225	250	7000	1000	53.5	62.5
CAP0.5Q0-D-0.65	0.65	200	225	250	7000	1000	54.5	63.5
CAP0.5Q0-D-0.75	0.75	200	225	250	7000	1000	55.5	64.5
CAP0.5Q0-D-0.88	0.88	200	225	250	7000	1000	56.5	65.5
CAP0.5Q0-D-1.00	1.00	200	225	250	6000	850	57.5	66.5
CAP0.5Q0-D-1.25	1.25	200	225	250	5000	700	59.5	68.5
CAP0.5Q0-D-1.50	1.50	200	225	250	4000	600	61.5	70.5
CAP0.5Q0-D-1.75	1.75	180	210	230	4000	600	63.5	72.5
CAP0.5Q0-D-2.00	2.00	160	190	210	3000	500	65.5	74.5

CAP0.5Q1

- ★ Use axial gap automatic compensation mechanism.
- ★ High sustained working pressure and long service life .
- ★ Anti fouling ability is strong and suitable for power units, machines and other kinds Of hydraulic systems .

OUTLET **INLET**

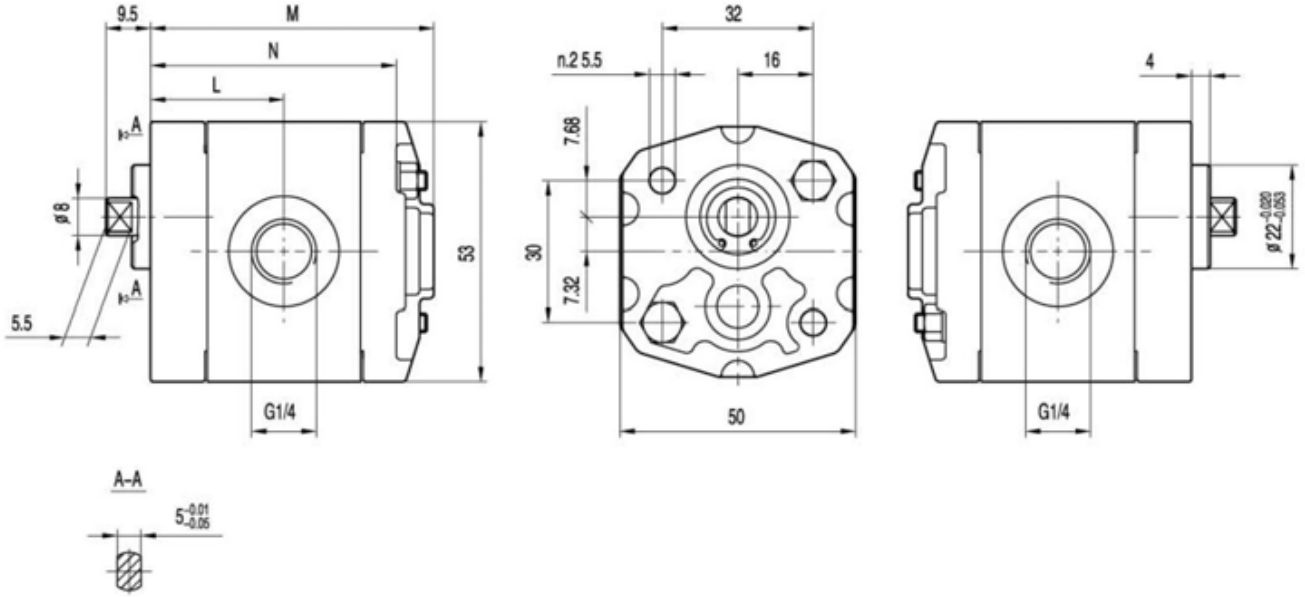

Type	Displacement	Max. pressure			Max. speed	Min. speed	Dimensions		
		P1	P2	P3			N	M	L
	(cm^3/rev)	bar	bar	bar	(r/min)	(r/min)	mm	mm	mm
CAP0.5Q1-D-0.19	0.19	200	225	250	7000	1000	51	60	27.2
CAP0.5Q1-D-0.26	0.26	200	225	250	7000	1000	51.5	60.5	27.5
CAP0.5Q1-D-0.38	0.38	200	225	250	7000	1000	52.5	61.5	28
CAP0.5Q1-D-0.50	0.50	200	225	250	7000	1000	53.5	62.5	28.5
CAP0.5Q1-D-0.65	0.65	200	225	250	7000	1000	54.5	63.5	29
CAP0.5Q1-D-0.75	0.75	200	225	250	7000	1000	55.5	64.5	29.5
CAP0.5Q1-D-0.88	0.88	200	225	250	7000	1000	56.5	65.5	30
CAP0.5Q1-D-1.00	1.00	200	225	250	6000	850	57.5	66.5	30.5
CAP0.5Q1-D-1.25	1.25	200	225	250	5000	700	59.5	68.5	31.5
CAP0.5Q1-D-1.50	1.50	200	225	250	4000	600	61.5	70.5	32.5
CAP0.5Q1-D-1.75	1.75	180	210	230	4000	600	63.5	72.5	33.5
CAP0.5Q1-D-2.00	2.00	160	190	210	3000	500	65.5	74.5	34.5

CAP0.5Q2-V0T1

- ★ Use axial gap automatic compensation mechanism.
- ★ High sustained working pressure and long service life .
- ★ Anti fouling ability is strong and suitable for power units, machines and other kinds Of hydraulic systems .

INLET **OUTLET**

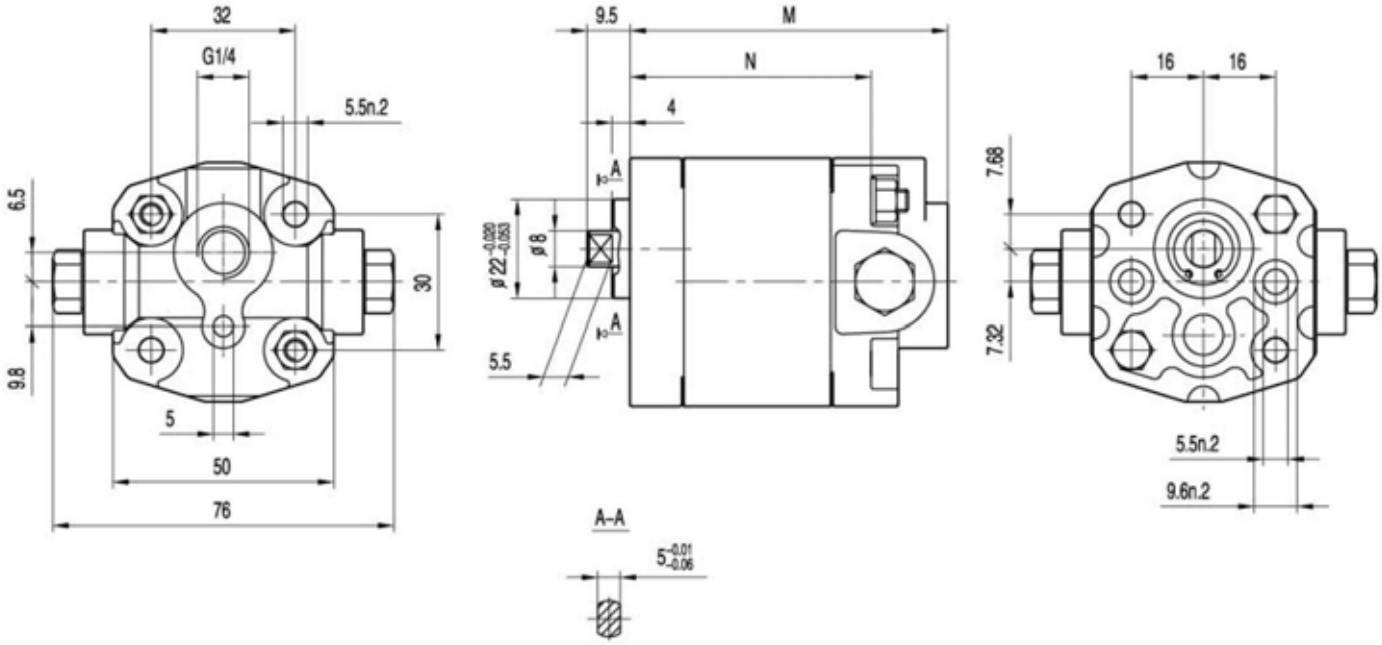

Type	Displacement	Max. pressure			Max.	Min.	Dimensions	
		P1	P2	P3	speed	speed	N	M
	(cm^3/rev)	bar	bar	bar	(r/min)	(r/min)	mm	mm
CAP0.5Q2-R-0.19-V0T1	0.19	150	170	190	7000	1000	51	68
CAP0.5Q2-R-0.26-V0T1	0.26	150	170	190	7000	1000	51.5	68.5
CAP0.5Q2-R-0.38-V0T1	0.38	150	170	190	7000	1000	52.5	69.5
CAP0.5Q2-R-0.50-V0T1	0.50	150	170	190	7000	1000	53.5	70.5
CAP0.5Q2-R-0.65-V0T1	0.65	150	170	190	7000	1000	54.5	71.5
CAP0.5Q2-R-0.75-V0T1	0.75	150	170	190	7000	1000	55.5	72.5
CAP0.5Q2-R-0.88-V0T1	0.88	150	170	190	7000	1000	56.5	73.5
CAP0.5Q2-R-1.00-V0T1	1.00	150	170	190	6000	850	57.5	74.5
CAP0.5Q2-R-1.25-V0T1	1.25	150	170	190	5000	700	59.5	76.5
CAP0.5Q2-R-1.50-V0T1	1.50	150	170	190	4000	600	61.5	78.5
CAP0.5Q2-R-1.75-V0T1	1.75	150	170	190	4000	600	63.5	80.5
CAP0.5Q2-R-2.00-V0T1	2.00	150	170	190	3000	500	65.5	82.5

CAP0.5

FRONT COVER

SHAFTS

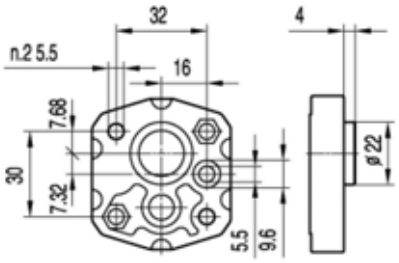

Q0

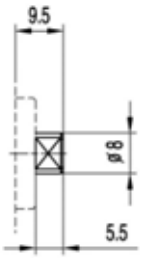

B0

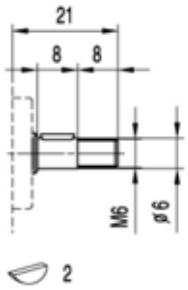

P0

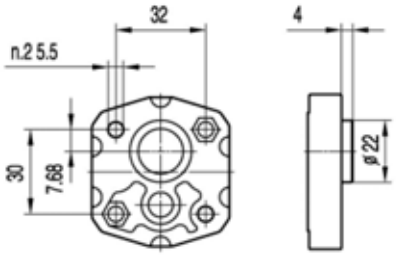

Q1

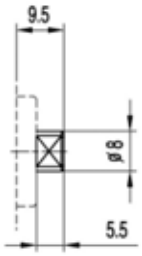

B0

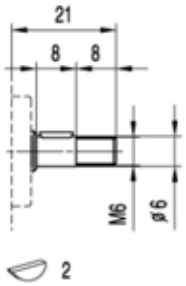

P0

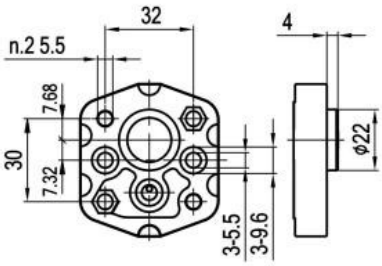

Q2

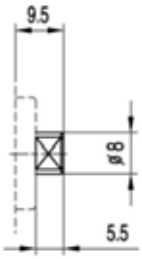

B0

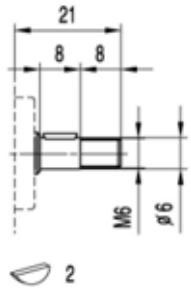

P0

CAP0.5

PORTS

G0

TYPE	INLET	OUTLET
	A	a
CAP0.5..0.19 ～ CAP0.5..2.00	G1/4	Φ5.5

G1

TYPE	INLET	OUTLET
	A	a
CAP0.5..0.19 ～ CAP0.5..2.00	G3/8	Φ5.5

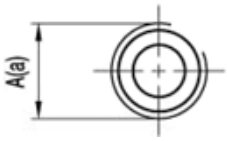

M0

TYPE	INLET	OUTLET
	A	a
CAP0.5..0.19 ～ CAP0.5..2.00	M10×1	M10×1

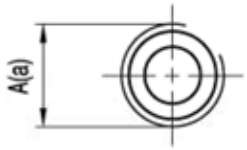

L0

TYPE	INLET	OUTLET
	A	a
CAP0.5..0.19 ～ CAP0.5..2.00	G1/4	G1/4

CAP0.5

OPTIONS

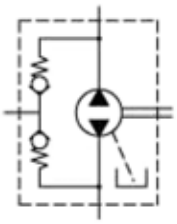

V0

DISCRIPTION
Directional valves with external drain .

CAP1

HOW TO ORDER

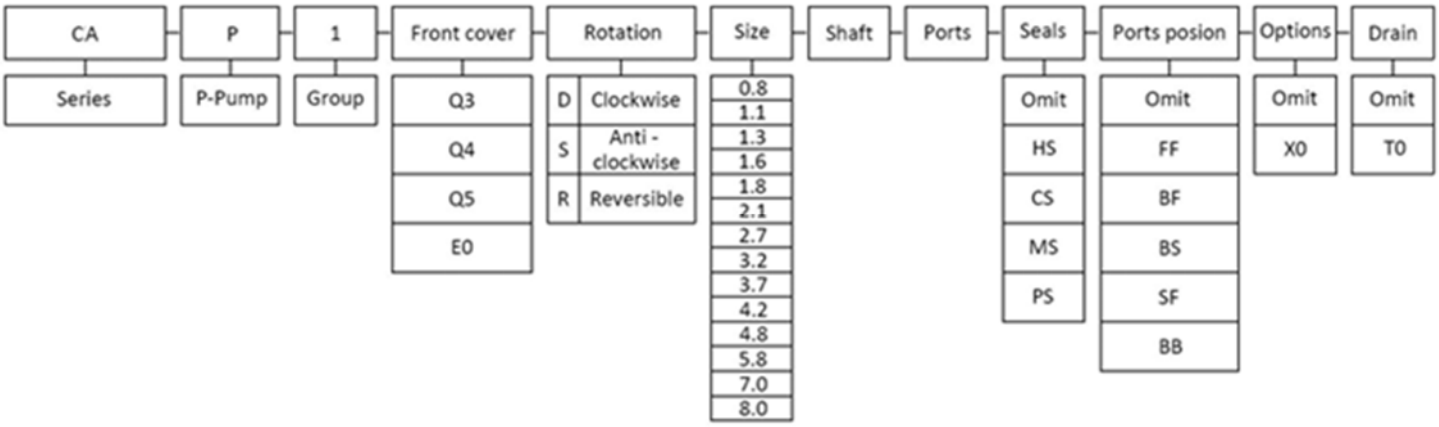

Seals

Omit - Range between -10℃and +80℃， inlet pressure up to max. 3 bar absolute (standard seal) .

HS - Version suitable for fluid at hi-temperatures , range between -10℃and +120℃ .

CS - Version suitable for fluid at low-temperatures , range between -40℃and +80℃ .

MS - Version suitable for inlet pressure up to max. 3 and 6 bar absolute .

PS - Version suitable for inlet pressure up to max. 3 and 10 bar absolute .

Ports position

Omit - Side inlet and side outlet .

FF - Front inlet and front outlet .

BF - Back inlet and front outlet .

BS - Back inlet and side outlet .

SF - Side inlet and front outlet .

BB - Back inlet and back outlet

Options

Omit - Have no valves .

X0 - Pressure valve .

Drain

Omit - Have no drain .

T0 - Internal drain .

Examples

CAP1Q3-D-2.1B1G4-BF = CA series , 1 group pump , Q3 front cover , Clockwise , 2.1 cc/rev , B1 shaft , G4 ports , standard seal , back inlet and front outlet .

CAP1Q3

★ Use axial gap automatic compensation mechanism.

★ High sustained working pressure and long service life .

★ Anti fouling ability is strong and suitable for power units, machines and other kinds Of hydraulic systems .

INLET **OUTLET**

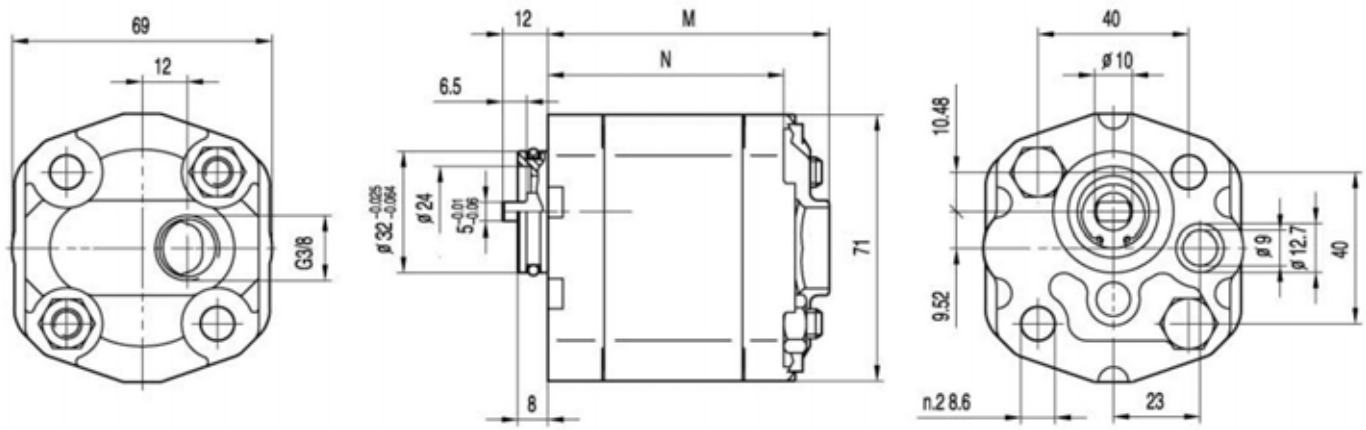

Type	Displacement	Max. pressure			Max. speed	Min. speed	Dimensions	
		P1	P2	P3			N	M
	(cm^3/rev)	bar	bar	bar	(r/min)	(r/min)	mm	mm
CAP1Q3-D-0.8	0.8	200	225	250	6000	1000	61.5	73.5
CAP1Q3-D-1.1	1.1	200	225	250	6000	1000	62	74
CAP1Q3-D-1.3	1.3	200	225	250	6000	1000	63	75
CAP1Q3-D-1.6	1.6	200	225	250	6000	1000	64	76
CAP1Q3-D-1.8	1.8	200	225	250	6000	1000	65	77
CAP1Q3-D-2.1	2.1	200	225	250	6000	1000	66	78
CAP1Q3-D-2.7	2.7	200	225	250	6000	800	68	80
CAP1Q3-D-3.2	3.2	200	225	250	5000	800	70	82
CAP1Q3-D-3.7	3.7	200	225	250	4500	800	72	84
CAP1Q3-D-4.2	4.2	200	225	250	4000	800	74	86
CAP1Q3-D-4.8	4.8	190	210	230	3500	600	76	88
CAP1Q3-D-5.8	5.8	190	210	230	3000	600	80	92
CAP1Q3-D-7.0	7.0	160	180	200	2500	600	84	96
CAP1Q3-D-8.0	8.0	160	180	200	2100	600	88	100

CAP1Q4

★ Use axial gap automatic compensation mechanism.

★ High sustained working pressure and long service life .

★ Anti fouling ability is strong and suitable for power units, machines and other kinds Of hydraulic systems .

OUTLET **INLET**

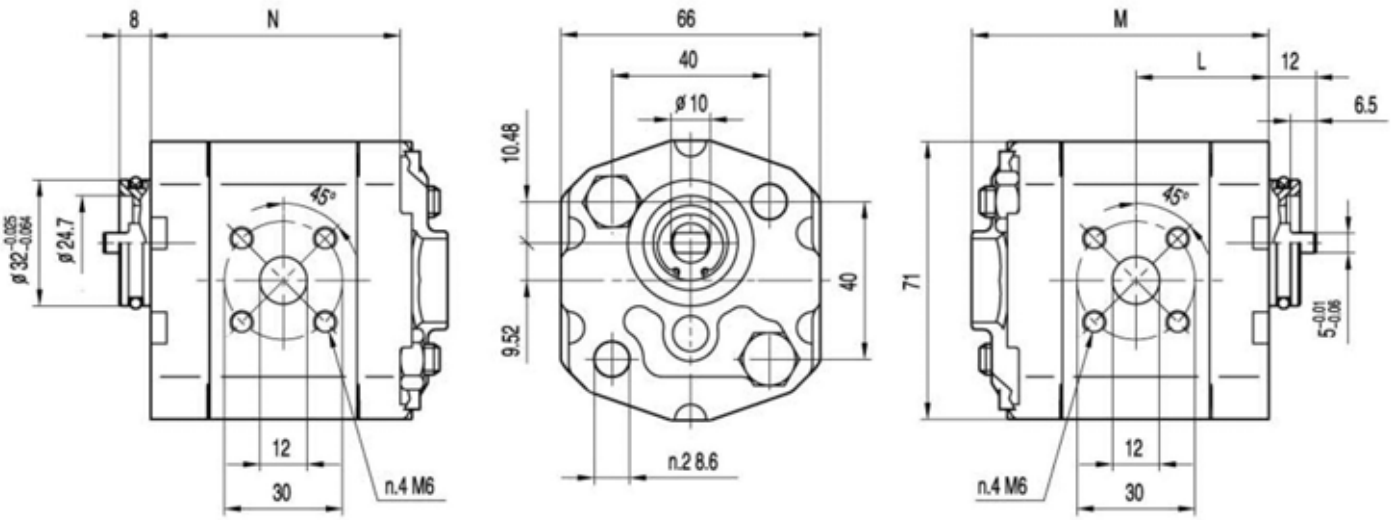

Type	Displacement	Max. pressure			Max.	Min.	Dimensions		
		P1	P2	P3	speed	speed	N	M	L
	(cm^3/rev)	bar	bar	bar	(r/min)	(r/min)	mm	mm	mm
CAP1Q4-D-0.8	0.8	200	225	250	6000	1000	61.5	73.5	32.8
CAP1Q4-D-1.1	1.1	200	225	250	6000	1000	62	74	33
CAP1Q4-D-1.3	1.3	200	225	250	6000	1000	63	75	33.5
CAP1Q4-D-1.6	1.6	200	225	250	6000	1000	64	76	34
CAP1Q4-D-1.8	1.8	200	225	250	6000	1000	65	77	34.5
CAP1Q4-D-2.1	2.1	200	225	250	6000	1000	66	78	35
CAP1Q4-D-2.7	2.7	200	225	250	6000	800	68	80	36
CAP1Q4-D-3.2	3.2	200	225	250	5000	800	70	82	37
CAP1Q4-D-3.7	3.7	200	225	250	4500	800	72	84	38
CAP1Q4-D-4.2	4.2	200	225	250	4000	800	74	86	39
CAP1Q4-D-4.8	4.8	190	210	230	3500	600	76	88	40
CAP1Q4-D-5.8	5.8	190	210	230	3000	600	80	92	42
CAP1Q4-D-7.0	7.0	160	180	200	2500	600	84	96	44
CAP1Q4-D-8.0	8.0	160	180	200	2100	600	88	100	46

CAP1Q5

★ Use axial gap automatic compensation mechanism.

★ High sustained working pressure and long service life .

★ Anti fouling ability is strong and suitable for power units, machines and other kinds Of hydraulic systems .

OUTET **INLET**

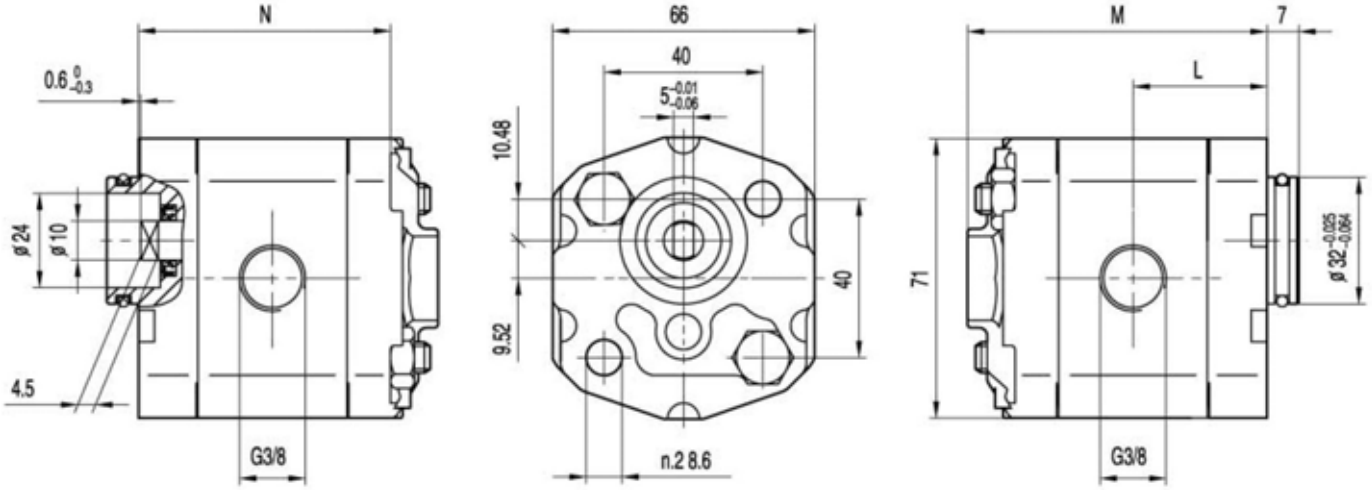

Type	Displacement	Max. pressure			Max. speed	Min. speed	Dimensions		
		P1	P2	P3			N	M	L
	(cm^3/rev)	bar	bar	bar	(r/min)	(r/min)	mm	mm	mm
CAP1Q5-D-0.8	0.8	200	225	250	6000	1000	61.5	73.5	32.8
CAP1Q5-D-1.1	1.1	200	225	250	6000	1000	62	74	33
CAP1Q5-D-1.3	1.3	200	225	250	6000	1000	63	75	33.5
CAP1Q5-D-1.6	1.6	200	225	250	6000	1000	64	76	34
CAP1Q5-D-1.8	1.8	200	225	250	6000	1000	65	77	34.5
CAP1Q5-D-2.1	2.1	200	225	250	6000	1000	66	78	35
CAP1Q5-D-2.7	2.7	200	225	250	6000	800	68	80	36
CAP1Q5-D-3.2	3.2	200	225	250	5000	800	70	82	37
CAP1Q5-D-3.7	3.7	200	225	250	4500	800	72	84	38
CAP1Q5-D-4.2	4.2	200	225	250	4000	800	74	86	39
CAP1Q5-D-4.8	4.8	190	210	230	3500	600	76	88	40
CAP1Q5-D-5.8	5.8	190	210	230	3000	600	80	92	42
CAP1Q5-D-7.0	7.0	160	180	200	2500	600	84	96	44
CAP1Q5-D-8.0	8.0	160	180	200	2100	600	88	100	46

CAP1E0

- ★ Use axial gap automatic compensation mechanism.
- ★ High sustained working pressure and long service life .
- ★ Anti fouling ability is strong and suitable for power units, machines and other kinds Of hydraulic systems .

INLET **OUTLET**

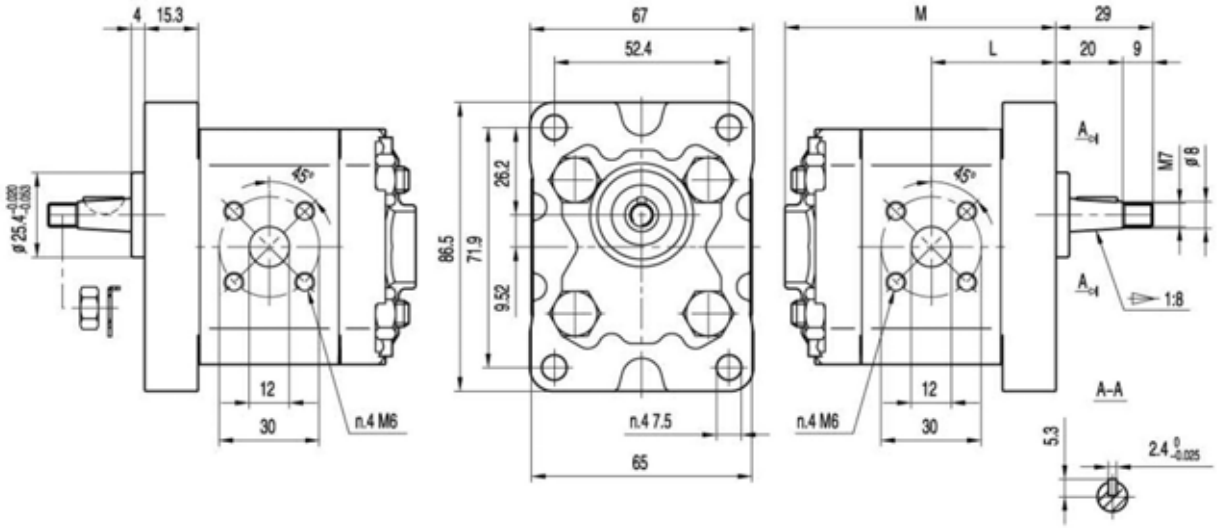

Type	Displacement	Max. pressure			Max. speed	Min. speed	Dimensions	
		P1	P2	P3			L	M
	(cm^3/rev)	bar	bar	bar	(r/min)	(r/min)	mm	mm
CAP1E0-S-0.8	0.8	200	225	250	6000	1000	32.8	73.5
CAP1E0-S-1.1	1.1	200	225	250	6000	1000	33	74
CAP1E0-S-1.3	1.3	200	225	250	6000	1000	33.5	75
CAP1E0-S-1.6	1.6	200	225	250	6000	1000	34	76
CAP1E0-S-1.8	1.8	200	225	250	6000	1000	34.5	77
CAP1E0-S-2.1	2.1	200	225	250	6000	1000	35	78
CAP1E0-S-2.7	2.7	200	225	250	6000	800	36	80
CAP1E0-S-3.2	3.2	200	225	250	5000	800	37	82
CAP1E0-S-3.7	3.7	200	225	250	4500	800	38	84
CAP1E0-S-4.2	4.2	200	225	250	4000	800	39	86
CAP1E0-S-4.8	4.8	190	210	230	3500	600	40	88
CAP1E0-S-5.8	5.8	190	210	230	3000	600	42	92
CAP1E0-S-7.0	7.0	160	180	200	2500	600	44	96
CAP1E0-S-8.0	8.0	160	180	200	2100	600	46	100

CAP1E0-X0T0

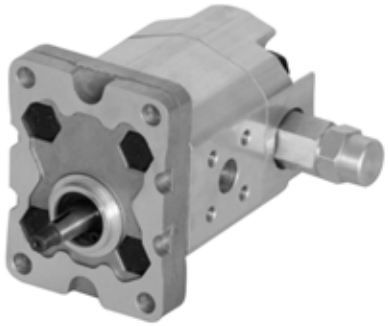

★ Use axial gap automatic compensation mechanism.

★ High sustained working pressure and long service life .

★ Anti fouling ability is strong and suitable for power units, machines and other kinds Of hydraulic systems .

OUTLET **INLET**

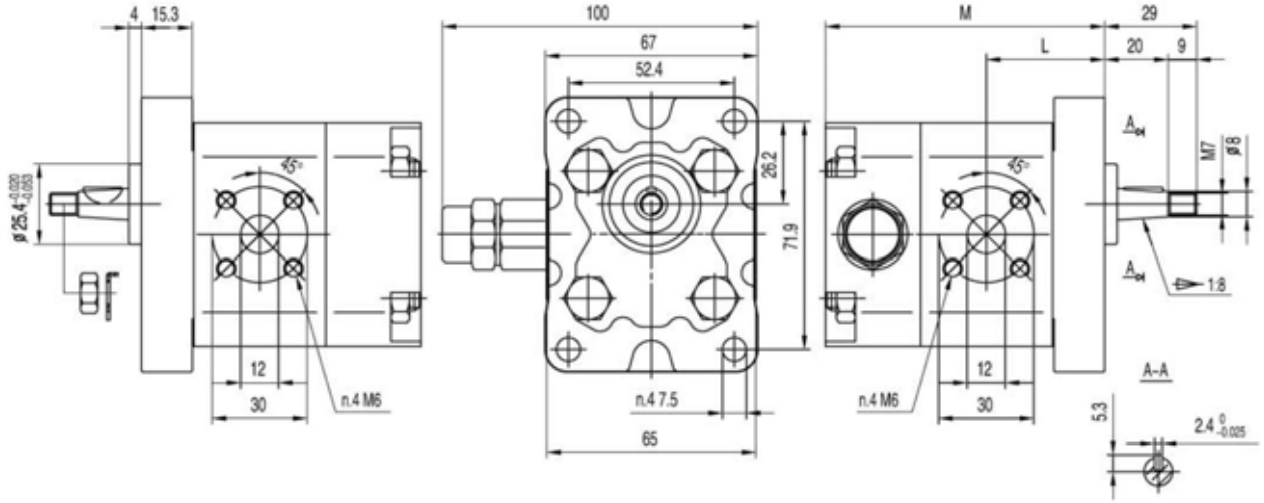

Type	Displacement	Max. pressure			Max. speed	Min. speed	Dimensions	
		P1	P2	P3			L	M
	(cm^3/rev)	bar	bar	bar	(r/min)	(r/min)	mm	mm
CAP1E0-D-0.8-X0T0	0.8	200	225	250	6000	1000	32.8	82.5
CAP1E0-D-1.1-X0T0	1.1	200	225	250	6000	1000	33	83
CAP1E0-D-1.3-X0T0	1.3	200	225	250	6000	1000	33.5	84
CAP1E0-D-1.6-X0T0	1.6	200	225	250	6000	1000	34	85
CAP1E0-D-1.8-X0T0	1.8	200	225	250	6000	1000	34.5	86
CAP1E0-D-2.1-X0T0	2.1	200	225	250	6000	1000	35	87
CAP1E0-D-2.7-X0T0	2.7	200	225	250	6000	800	36	89
CAP1E0-D-3.2-X0T0	3.2	200	225	250	5000	800	37	91
CAP1E0-D-3.7-X0T0	3.7	200	225	250	4500	800	38	93
CAP1E0-D-4.2-X0T0	4.2	200	225	250	4000	800	39	95
CAP1E0-D-4.8-X0T0	4.8	190	210	230	3500	600	40	97
CAP1E0-D-5.8-X0T0	5.8	190	210	230	3000	600	42	101
CAP1E0-D-7.0-X0T0	7.0	160	180	200	2500	600	44	105
CAP1E0-D-8.0-X0T0	8.0	160	180	200	2100	600	46	109

CAP1

FRONT COVER SHAFTS

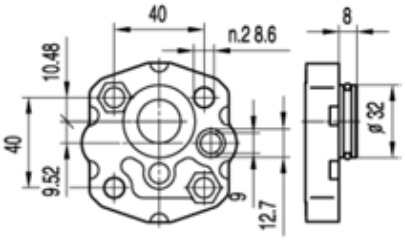

Q3

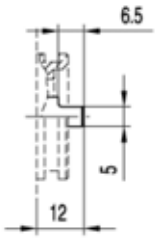

B1

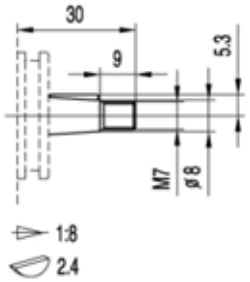

Z0

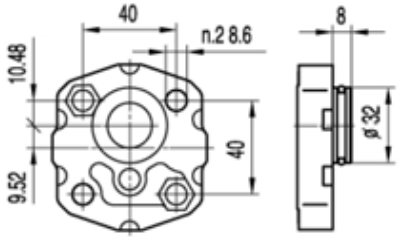

Q4

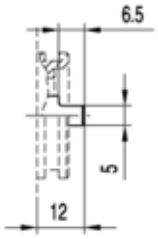

B1

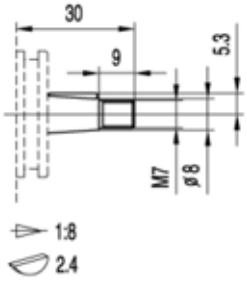

Z0

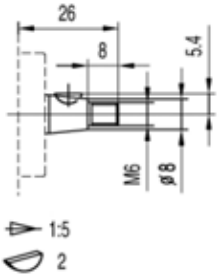

Z2

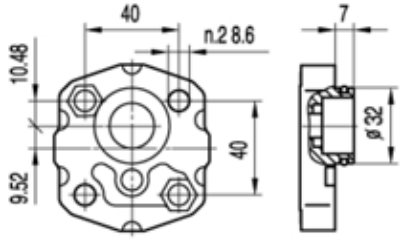

Q5

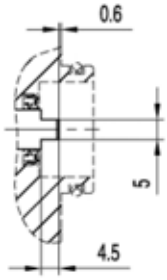

B2

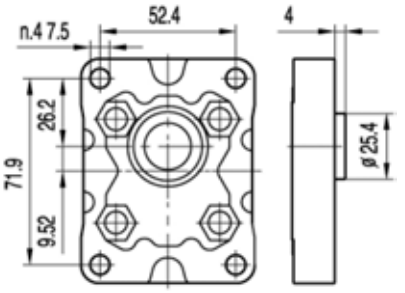

E0

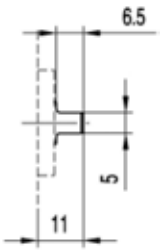

B3

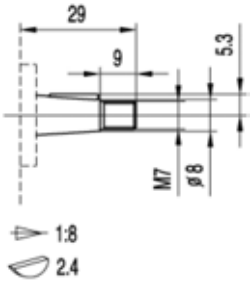

Z1

CAP1

PORTS

G2

TYPE	INLET	OUTLET
	A	a
KAP1..0.8 ～ KAP1..8.0	G1/4	Φ9

G3

TYPE	INLET	OUTLET
	A	a
CAP1..0.8 ～ CAP1..8.0	G3/8	Φ9

G4

TYPE	INLET	OUTLET
	A	a
CAP1..0.8 ～ CAP1..8.0	3/8NPT	Φ9

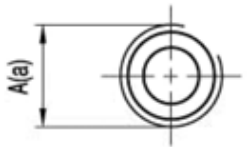

L1

TYPE	INLET	OUTLET
	A	a
CAP1..0.8 ～ **CAP**1..8.0	G3/8	G1/4

CAP1

PORTS

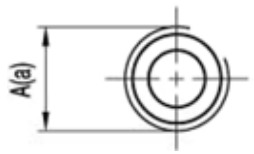

L2

TYPE	INLET	OUTLET
	A	a
CAP1..0.8 ～ CAP1..8.0	G3/8	G3/8

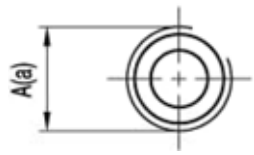

M1

TYPE	INLET	OUTLET
	A	a
CAP1..0.8 ～ CAP1..8.0	M18×1.5	M18×1.5

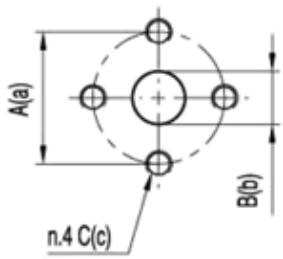

F1

TYPE	INLET			OUTLET		
	A	B	C	a	b	c
CAP1..2.1 ～ CAP1..8.0	30	12	M6	30	12	M6

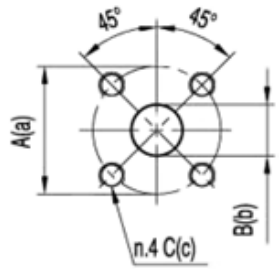

F40

TYPE	INLET			OUTLET		
	A	B	C	a	b	c
CAP1..0.8 ～ CAP1..8.0	30	12	M6	30	12	M6

CAP1

OPTIONS

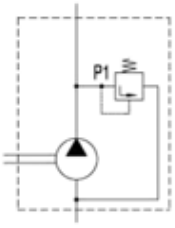

X0

DISCRIPTION
Pressure relief valve with internal drain ; setting pressure between 5 and 230 bar .

CAP1.5[CHP1.5]

HOW TO ORDER

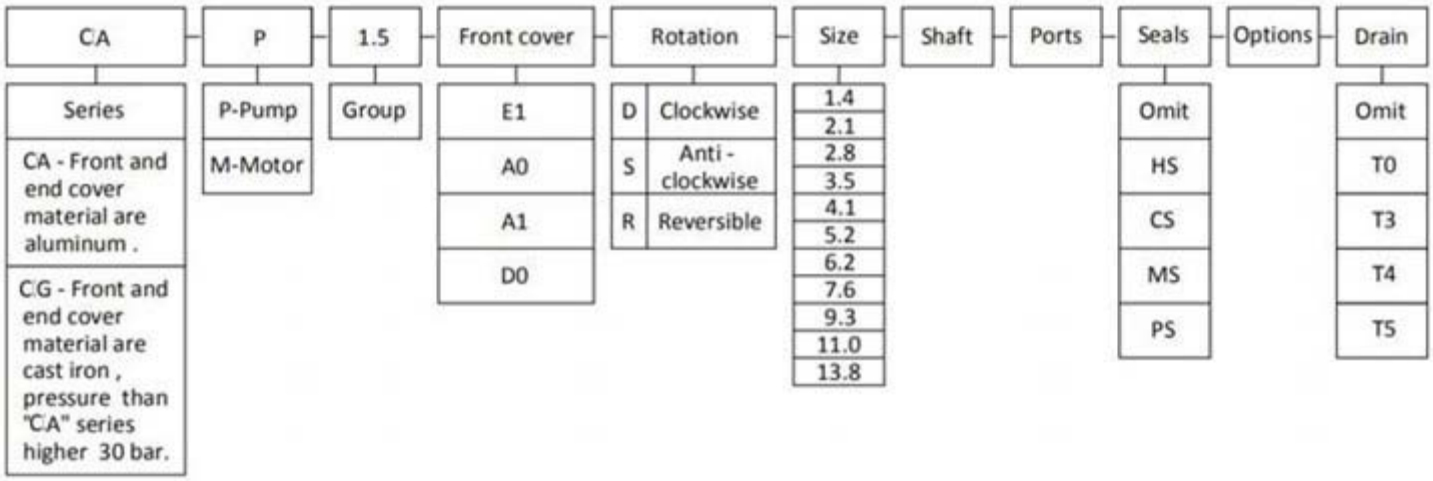

Seals

Omit - Range between -10℃and +80℃， inlet pressure up to max. 3 bar absolute (standard seal) .

HS - Version suitable for fluid at hi-temperatures , range between -10℃and +120℃ .

CS - Version suitable for fluid at low-temperatures , range between -40℃and +80℃ .

MS - Version suitable for inlet pressure up to max. 3 and 6 bar absolute .

PS - Version suitable for inlet pressure up to max. 3 and 10 bar absolute .

Drain

Omit - Have no drain .

T0 - Internal drain .

T3 - External drain G1/4 .

T4 - External drain 7/16-20 UNF .

T5 - External drain 9/16-18 UNF .

Examples

CAP1.5A0-D-5.2P2L4 = CA series , 1.5 group pump , A0 front cover , Clockwise , 5.2 cc/rev , P2 shaft , L4 ports , standard seal , side inlet and side outlet .

CAP1.5E1

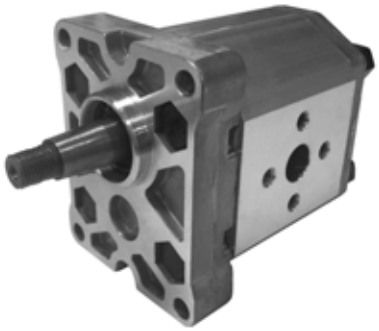

★ Use axial gap automatic compensation mechanism.

★ High sustained working pressure and long service life .

★ Anti fouling ability is strong and suitable for power units, machines and other kinds Of hydraulic systems .

OUTLET **INLET**

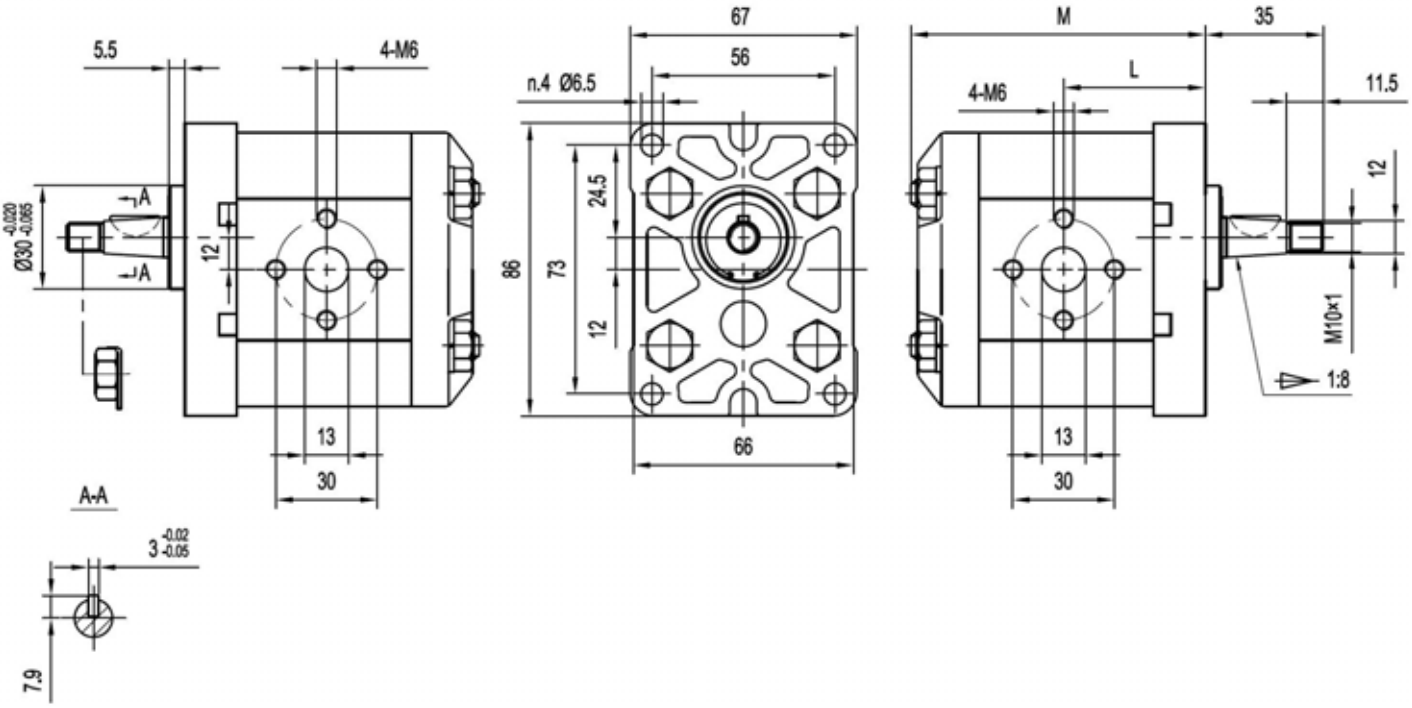

Type	Displacement	Max. pressure			Max.	Min.	Dimensions	
		P1	P2	P3	speed	speed	L	M
	(cm /rev)	bar	bar	bar	(r/min)	(r/min)	mm	mm
CAP1.5E1-D-1.4	1.4	200	225	250	6000	800	40	82.5
CAP1.5E1-D-2.1	2.1	200	225	250	6000	800	41	84.5
CAP1.5E1-D-2.8	2.8	200	225	250	5000	800	42	86.5
CAP1.5E1-D-3.5	3.5	200	225	250	5000	800	43	88.5
CAP1.5E1-D-4.1	4.1	200	225	250	4000	800	44	90.5
CAP1.5E1-D-5.2	5.2	200	225	250	4000	800	45.5	93.5
CAP1.5E1-D-6.2	6.2	200	225	250	3800	800	47	96.5
CAP1.5E1-D-7.6	7.6	200	215	230	3200	600	49	100.5
CAP1.5E1-D-9.3	9.3	180	195	210	2600	600	51.5	105.5
CAP1.5E1-D-11.0	11.0	170	185	200	2200	600	54	110.5
CAP1.5E1-D-13.8	13.8	150	165	180	1800	600	58	118.5

CAP1.5A0

- ★ Use axial gap automatic compensation mechanism.
- ★ High sustained working pressure and long service life .
- ★ Anti fouling ability is strong and suitable for power units,machines and other kinds 0f hydraulic systems .

OUTLET **INLET**

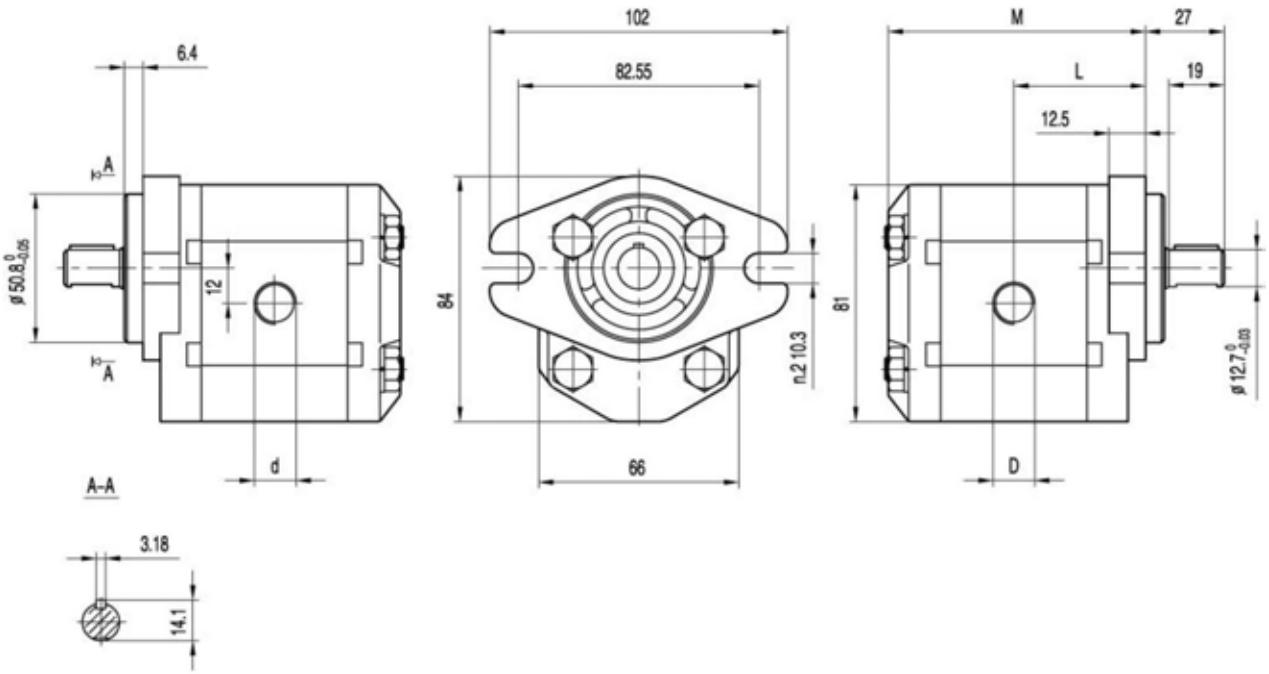

Type	Displacement	Max. pressure			Max.	Min.	Dimensions			
		P1	P2	P3	speed	speed	L	M	D	d
	(cm^3/rev)	bar	bar	bar	(r/min)	(r/min)	mm	mm		
CAP1.5A0-D-1.4	1.4	200	225	250	6000	800	42	82.5	G1/2	G3/8
CAP1.5A0-D-2.1	2.1	200	225	250	6000	800	43	84.5	G1/2	G3/8
CAP1.5A0-D-2.8	2.8	200	225	250	5000	800	44	86.5	G1/2	G3/8
CAP1.5A0-D-3.5	3.5	200	225	250	5000	800	45	88.5	G1/2	G3/8
CAP1.5A0-D-4.1	4.1	200	225	250	4000	800	46	90.5	G1/2	G1/2
CAP1.5A0-D-5.2	5.2	200	225	250	4000	800	47.5	93.5	G1/2	G1/2
CAP1.5A0-D-6.2	6.2	200	225	250	3800	800	49	96.5	G1/2	G1/2
CAP1.5A0-D-7.6	7.6	200	215	230	3200	600	51	100.5	G1/2	G1/2
CAP1.5A0-D-9.3	9.3	180	195	210	2600	600	53.5	105.5	G1/2	G1/2
CAP1.5A0-D-11.0	11.0	170	185	200	2200	600	56	110.5	G1/2	G1/2
CAP1.5A0-D-13.8	13.8	150	165	180	1800	600	60	118.5	G1/2	G1/2

CHP1.5D0

- ★ Use axial gap automatic compensation mechanism.
- ★ High sustained working pressure and long service life .
- ★ Anti fouling ability is strong and suitable for power units, machines and other kinds Of hydraulic systems .

OUTLET **INLET**

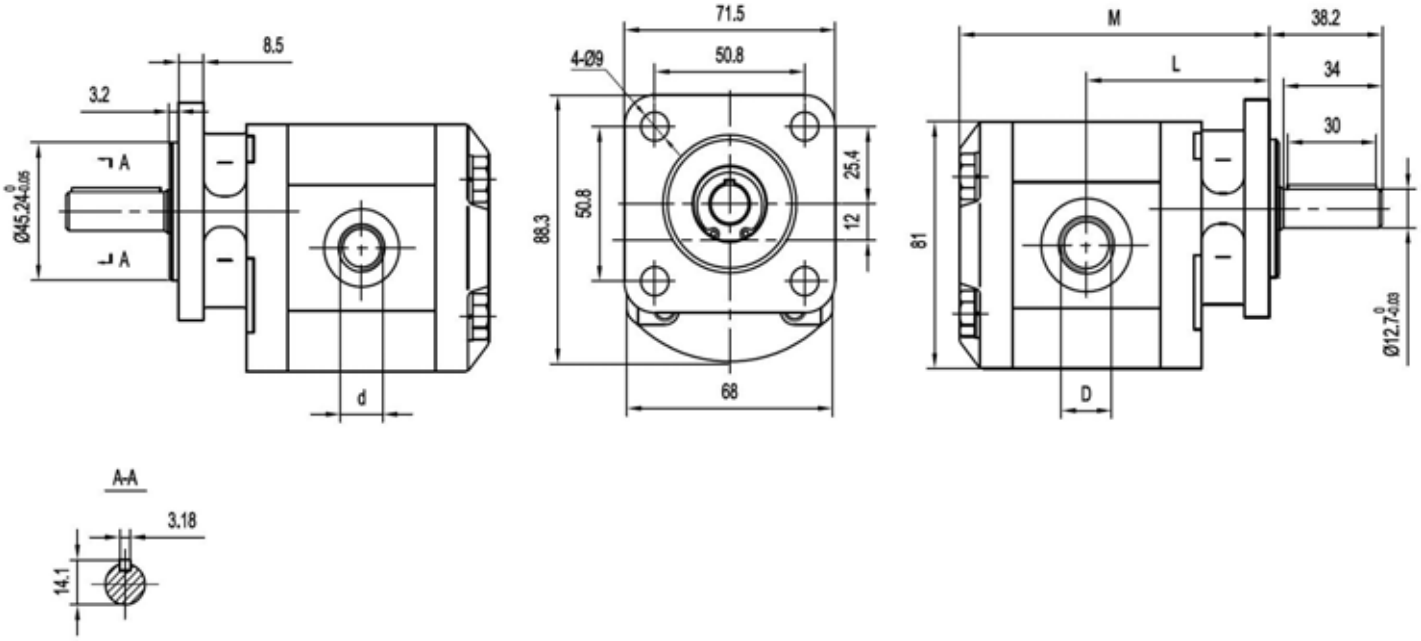

Type	Displacement	Max. pressure			Max. speed	Min. speed	Dimensions			
		P1	P2	P3			L	M	D	d
	(cm^3/rev)	bar	bar	bar	(r/min)	(r/min)	mm	mm		
CAP1.5D0-D-1.4	1.4	200	225	250	6000	800	59	98	3/4-16UNF	9/16-18UNF
CAP1.5D0-D-2.1	2.1	200	225	250	6000	800	60	100	3/4-16UNF	9/16-18UNF
CAP1.5D0-D-2.8	2.8	200	225	250	5000	800	61	102	3/4-16UNF	9/16-18UNF
CAP1.5D0-D-3.5	3.5	200	225	250	5000	800	62	104	3/4-16UNF	9/16-18UNF
CAP1.5D0-D-4.1	4.1	200	225	250	4000	800	63	106	3/4-16UNF	9/16-18UNF
CAP1.5D0-D-5.2	5.2	200	225	250	4000	800	64.5	109	3/4-16UNF	9/16-18UNF
CAP1.5D0-D-6.2	6.2	200	225	250	3800	800	66	112	3/4-16UNF	9/16-18UNF
CAP1.5D0-D-7.6	7.6	200	215	230	3200	600	68	116	7/8-14UNF	3/4-16UNF
CAP1.5D0-D-9.3	9.3	180	195	210	2600	600	70.5	121	7/8-14UNF	3/4-16UNF
CAP1.5D0-D-11.0	11.0	170	185	200	2200	600	73	126	7/8-14UNF	3/4-16UNF
CAP1.5D0-D-13.8	13.8	150	165	180	1800	600	77	134	7/8-14UNF	3/4-16UNF

CHM1.5A1

★ Use axial gap automatic compensation mechanism.

★ High sustained working pressure and long service life .

★ Anti fouling ability is strong and suitable for power units, machines and other kinds Of hydraulic systems .

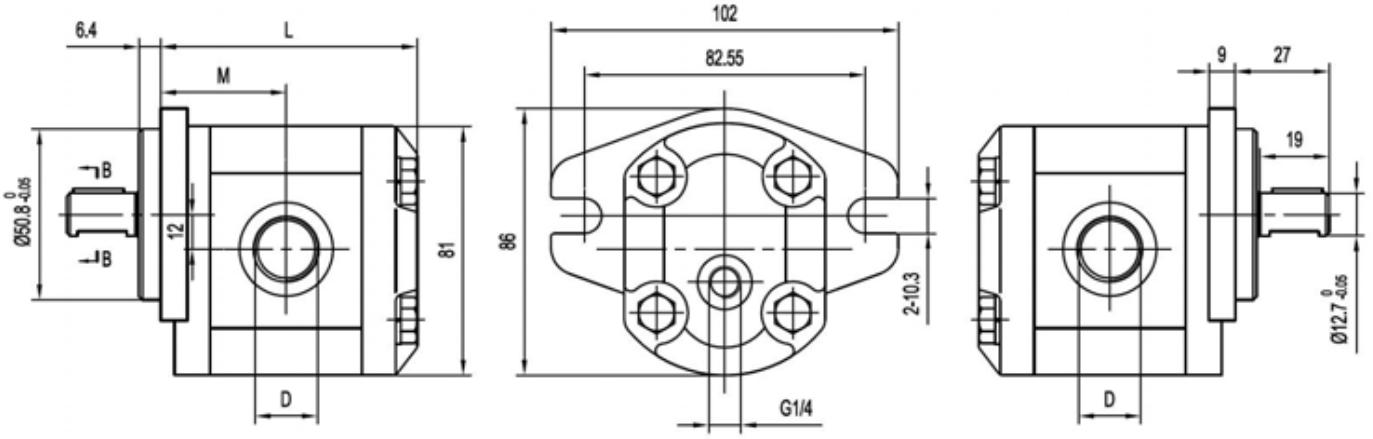

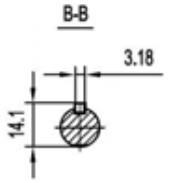

P1 = Max. peak input pressure continually .

Type	Displacement	Max. pressure			Max. speed	Min. speed	Dimensions		
		P1	P2	P3			L	M	D
	(cm^3/rev)	bar	bar	bar	(r/min)	(r/min)	mm	mm	
CHM1.5A1-R-1.4-T3	1.4	200	225	250	6000	800	42	82.5	3/4-16UNF
CHM1.5A1-R-2.1-T3	2.1	200	225	250	6000	800	43	84.5	3/4-16UNF
CHM1.5A1-R-2.8-T3	2.8	200	225	250	5000	800	44	86.5	3/4-16UNF
CHM1.5A1-R-3.5-T3	3.5	200	225	250	5000	800	45	88.5	3/4-16UNF
CHM1.5A1-R-4.1-T3	4.1	200	225	250	4000	800	46	90.5	3/4-16UNF
CHM1.5A1-R-5.2-T3	5.2	200	225	250	4000	800	47.5	93.5	3/4-16UNF
CHM1.5A1-R-6.2-T3	6.2	200	225	250	3800	800	49	96.5	3/4-16UNF
CHM1.5A1-R-7.6-T3	7.6	200	215	230	3200	600	51	100.5	7/8-14UNF
CHM1.5A1-R-9.3-T3	9.3	180	195	210	2600	600	53.5	105.5	7/8-14UNF
CHM1.5A1-R-11.0-T3	11.0	170	185	200	2200	600	56	110.5	7/8-14UNF
CHM1.5A1-R-13.8-T3	13.8	150	165	180	1800	600	60	118.5	7/8-14UNF

CAP1.5[CHP1.5]

FRONT COVER

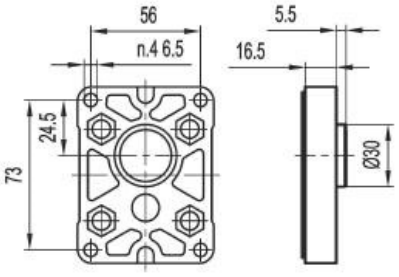

E1

SHAFTS

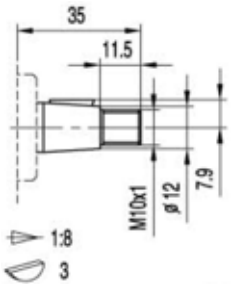

Z3

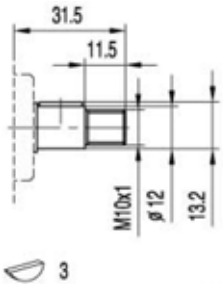

P1

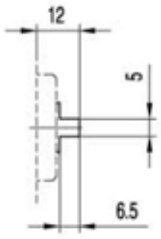

B4

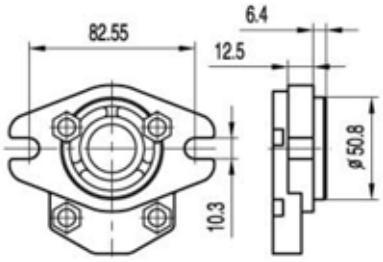

A0

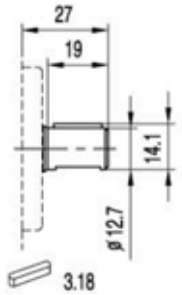

P2

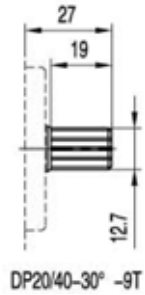

J0

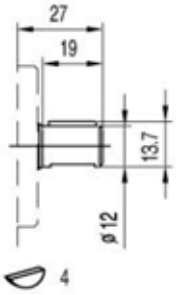

P3

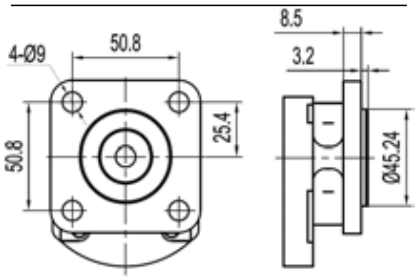

D0

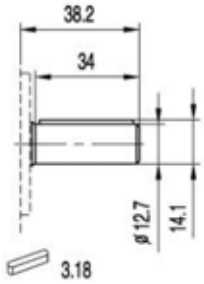

P4

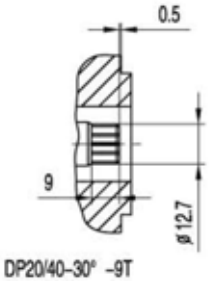

J1

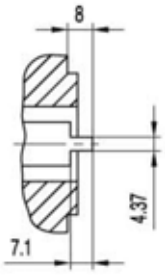

B5

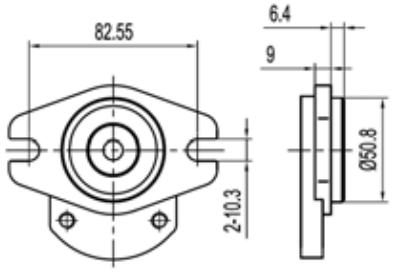

A1

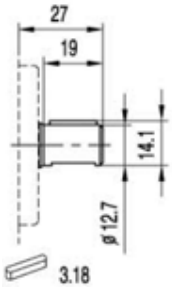

P2

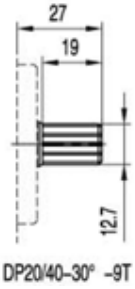

J0

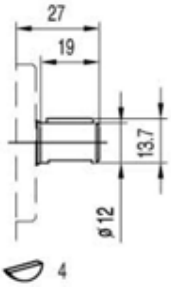

P3

CAP1.5[CHP1.5]

PORTS

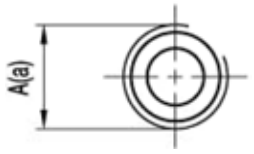

L2/L3/L4/L5

TYPE	CODE	INLET	OUTLET
		A	a
CAP1.5..1.4 ～ CAP1.5..3.5	L2	G3/8	G3/8
CAP1.5..1.4 ～ CAP1.5..3.5	L3	G1/2	G3/8
CAP1.5..4.1 ～ CAP1.5..13.8	L4	G1/2	G1/2
CAP1.5..4.1 ～ CAP1.5..13.8	L5	G3/4	G1/2

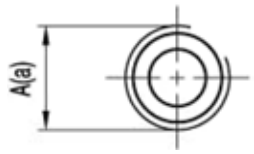

N0/N1/N2/N3

TYPE	CODE	INLET	OUTLET
		A	a
CAP1.5..1.4 ～ CAP1.5..6.2	N0	PT3/8	PT3/8
CAP1.5..1.4 ～ CAP1.5..6.2	N1	PT1/2	PT3/8
CAP1.5..1.4 ～ CAP1.5..13.8	N2	PT1/2	PT1/2
CAP1.5..7.6 ～ CAP1.5..13.8	N3	PT3/4	PT1/2

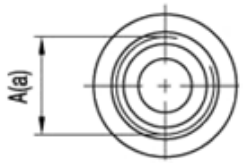

U0/U1/U2/U3

TYPE	CODE	INLET	OUTLET
		A	a
CAP1.5..1.4 ～ CAP1.5..6.2	U0	3/4-16UNF	9/16-18UNF
CAP1.5..1.4 ～ CAP1.5..6.2	U1	3/4-16UNF	3/4-16UNF
CAP1.5..7.6 ～ CAP1.5..13.8	U2	7/8-14UNF	3/4-16UNF
CAP1.5..7.6 ～ CAP1.5..13.8	U3	7/8-14UNF	7/8-14UNF

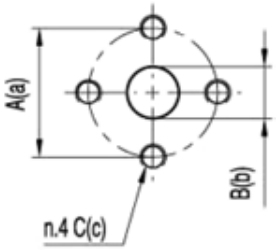

F2

TYPE	INLET			OUTLET		
	A	B	C	a	b	c
CAP1.5..1.4 ～ CAP1.5..13.8	30	13	M6	30	13	M6

CAP1.6

HOW TO ORDER

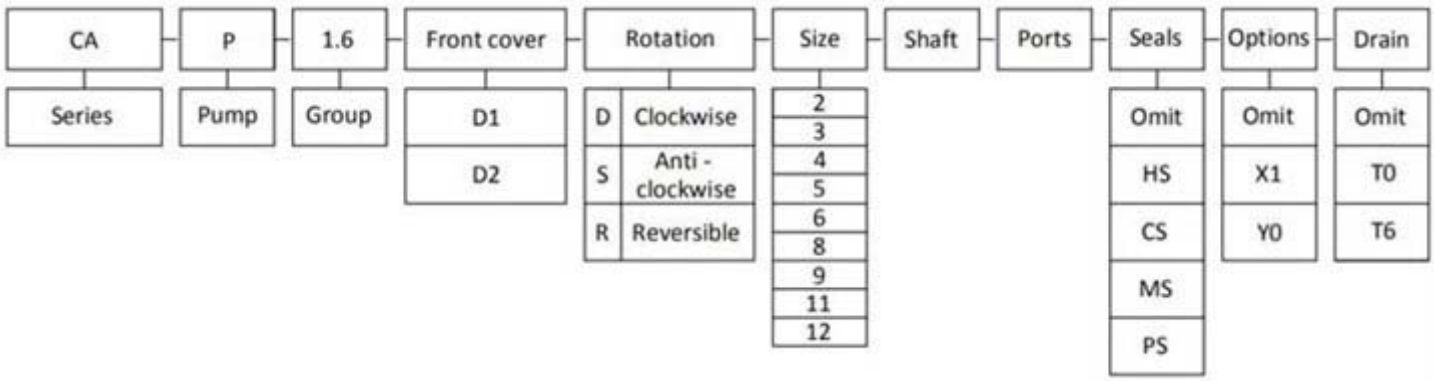

Seals

Omit - Range between -10℃and +80℃， inlet pressure up to max. 3 bar absolute (standard seal) .

HS - Version suitable for fluid at hi-temperatures , range between -10℃and +120℃ .

CS - Version suitable for fluid at low-temperatures , range between -40℃and +80℃ .

MS - Version suitable for inlet pressure up to max. 3 and 6 bar absolute .

PS - Version suitable for inlet pressure up to max. 3 and 10 bar absolute .

Options

Omit - have no valve .

X1 - Pressure relief valve with internal drain .

Y0 - Pressure relief valve with external drain .

Drain

Omit - Have no drain .

T0 - Internal drain .

T6 - External drain PT1/4 .

Examples

CAP1.6D1-S-8P5F19 = CA series , 1.6 group pump , D1 front cover , Anti-clockwise , 8 cc/rev , P5 shaft , F19 ports , standard seal , side inlet and side outlet .

CAP1.6D1

★ Use axial gap automatic compensation mechanism.

★ High sustained working pressure and long service life .

★ Anti fouling ability is strong and suitable for power units, machines and other kinds Of hydraulic systems .

INLET **OUTLET**

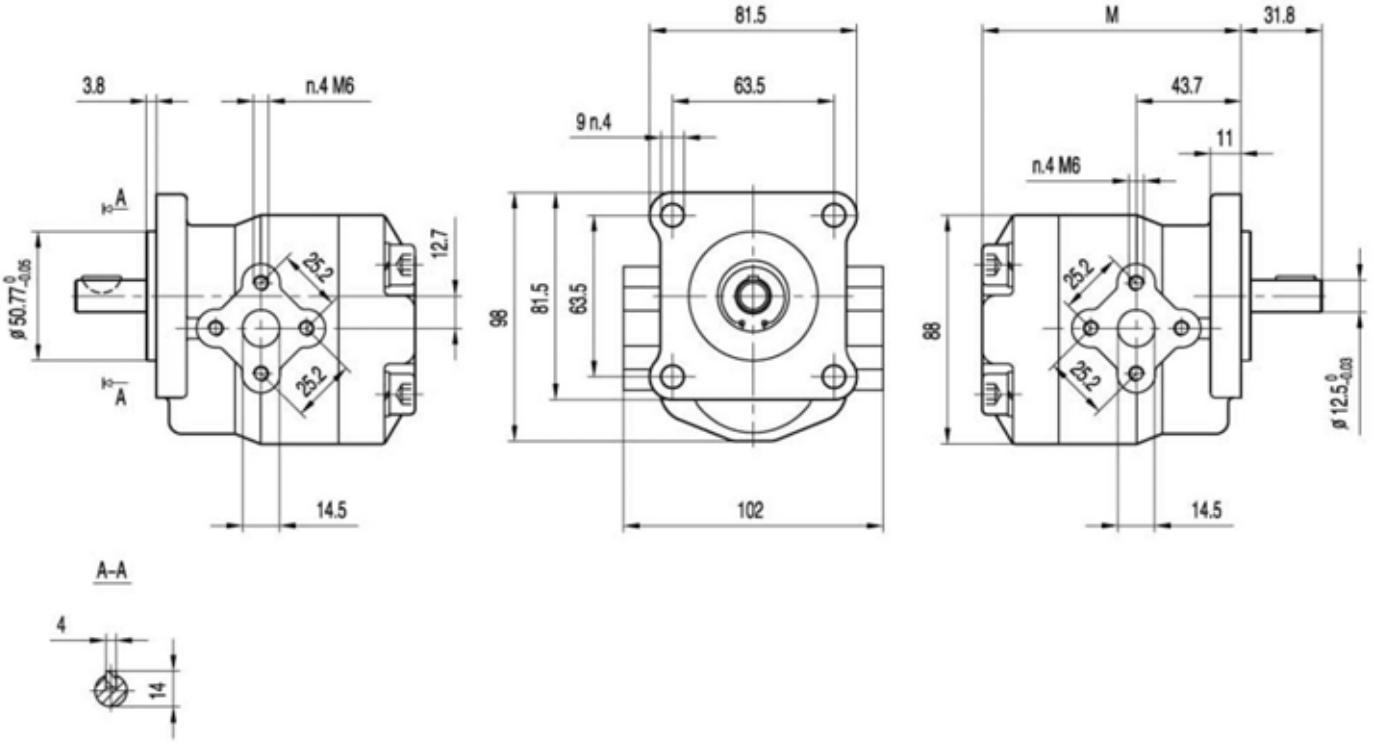

Type	Displacement	Max. pressure			Max. speed	Min. speed	Dimensions
		P1	P2	P3			M
	(cm³/rev)	bar	bar	bar	(r/min)	(r/min)	mm
CAP1.6D1-S-2	2	200	225	250	5000	900	96.7
CAP1.6D1-S-3	3	200	225	250	5000	850	96.7
CAP1.6D1-S-4	4	200	225	250	4500	800	96.7
CAP1.6D1-S-5	5	200	225	250	4000	800	96.7
CAP1.6D1-S-6	6	200	225	250	3500	700	99.7
CAP1.6D1-S-8	8	200	225	250	3000	600	99.7
CAP1.6D1-S-9	9	180	200	220	2500	550	102.7
CAP1.6D1-S-11	11	180	200	220	2000	500	105.7
CAP1.6D1-S-12	12	180	200	220	2000	500	105.7

CAP1.6D2

★ Use axial gap automatic compensation mechanism.

★ High sustained working pressure and long service life .

★ Anti fouling ability is strong and suitable for power units, machines and other kinds Of hydraulic systems .

INLET **OUTLET**

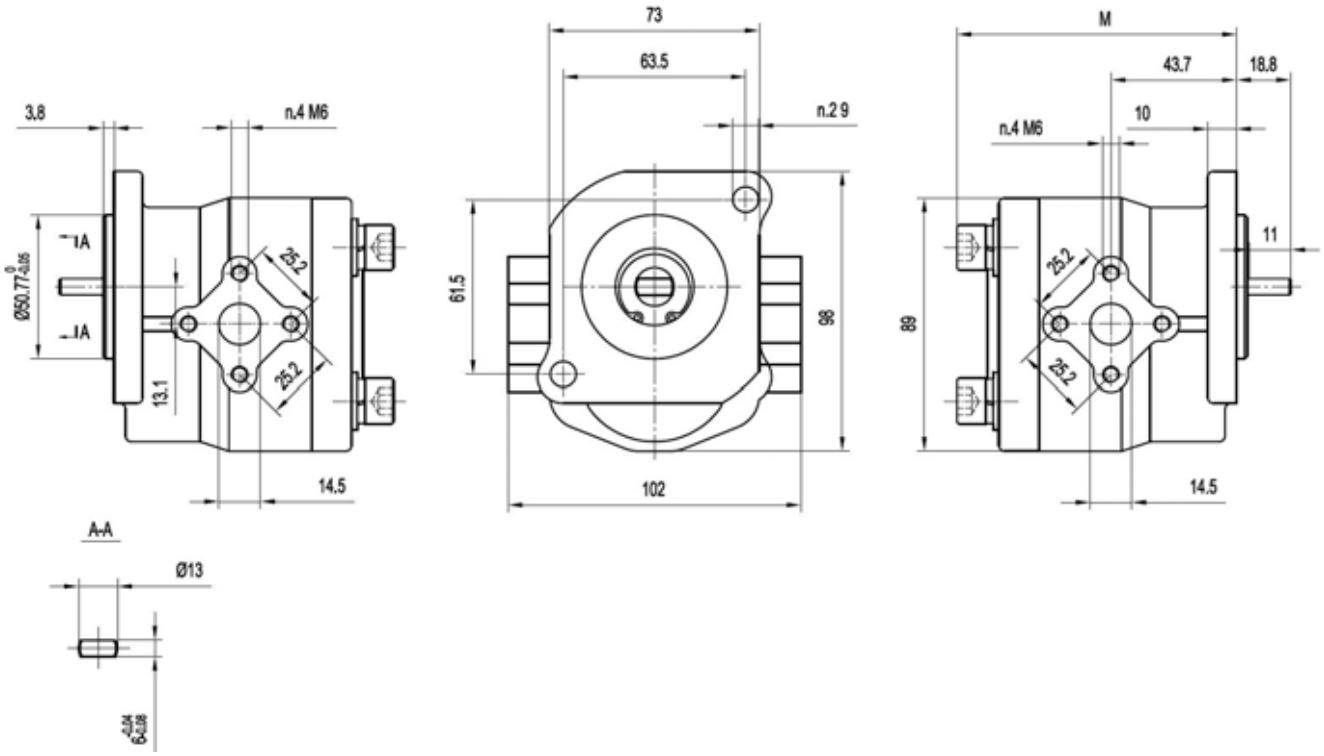

Type	Displacement	Max. pressure			Max. speed	Min. speed	Dimensions
		P1	P2	P3			M
	(cm^3/rev)	bar	bar	bar	(r/min)	(r/min)	mm
CAP1.6D2-S-2	2	200	225	250	5000	900	96.7
CAP1.6D2-S-3	3	200	225	250	5000	850	96.7
CAP1.6D2-S-4	4	200	225	250	4500	800	96.7
CAP1.6D2-S-5	5	200	225	250	4000	800	96.7
CAP1.6D2-S-6	6	200	225	250	3500	700	99.7
CAP1.6D2-S-8	8	200	225	250	3000	600	99.7
CAP1.6D2-S-9	9	180	200	220	2500	550	102.7
CAP1.6D2-S-11	11	180	200	220	2000	500	105.7
CAP1.6D2-S-12	12	180	200	220	2000	500	105.7

CAP1.6D1-Y0T6

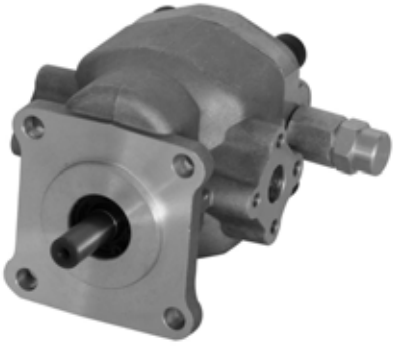

★ Use axial gap automatic compensation mechanism.

★ High sustained working pressure and long service life .

★ Anti fouling ability is strong and suitable for power units, machines and other kinds Of hydraulic systems .

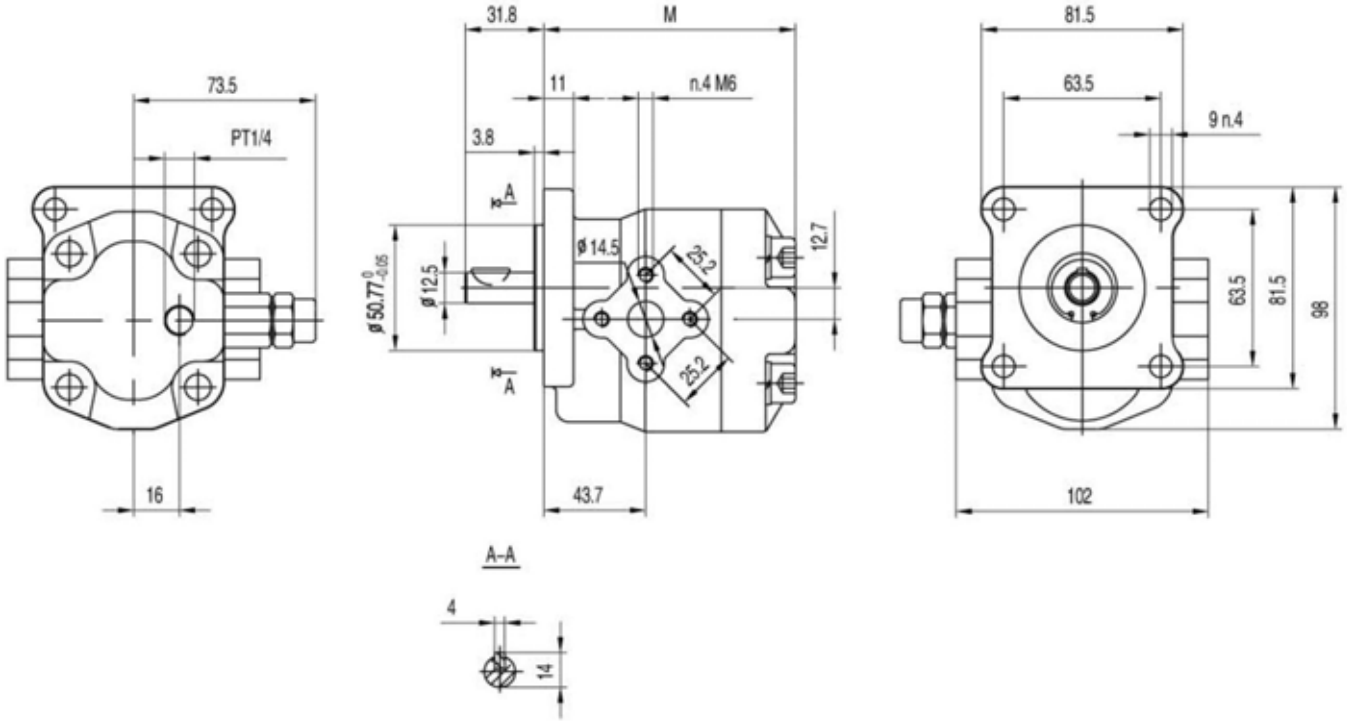

Type	Displacement	Max. pressure			Max. speed	Min. speed	Dimensions
		P1	P2	P3			M
	(cm^3/rev)	bar	bar	bar	(r/min)	(r/min)	mm
CAP1.6D1-D-2-Y0T6	2	200	225	250	5000	900	96.7
CAP1.6D1-D-3-Y0T6	3	200	225	250	5000	850	96.7
CAP1.6D1-D-4-Y0T6	4	200	225	250	4500	800	96.7
CAP1.6D1-D-5-Y0T6	5	200	225	250	4000	800	96.7
CAP1.6D1-D-6-Y0T6	6	200	225	250	3500	700	99.7
CAP1.6D1-D-8-Y0T6	8	200	225	250	3000	600	99.7
CAP1.6D1-D-9-Y0T6	9	180	200	220	2500	550	102.7
CAP1.6D1-D-11-Y0T6	11	180	200	220	2000	500	105.7
CAP1.6D1-D-12-Y0T6	12	180	200	220	2000	500	105.7

CAP1.6

FRONT COVER

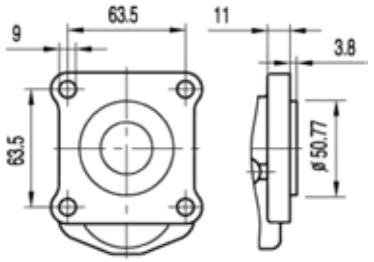

D1

SHAFTS

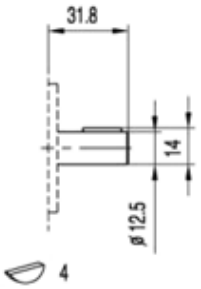

P5

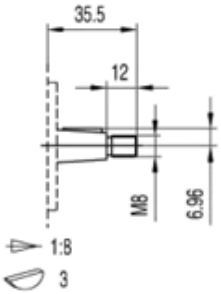

Z4

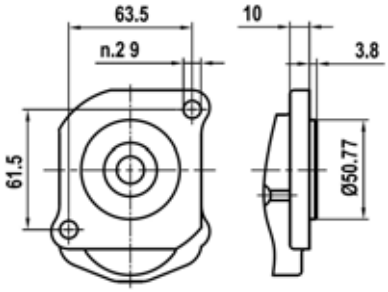

D2

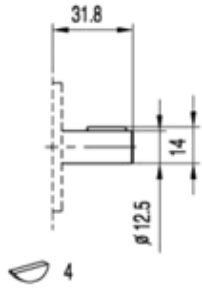

P5

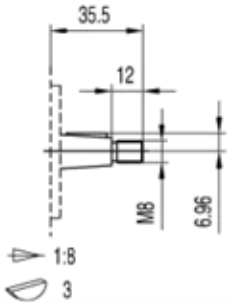

Z4

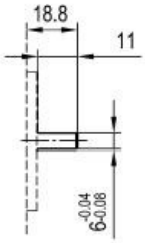

B8

PORTS

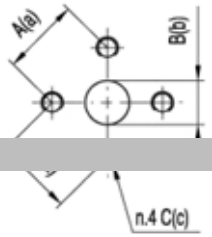

F19

TYPE	INLET			OUTLET		
	A	B	C	a	b	c
CAP1.6..2 ～ CAP1.6..12	25.2	14.5	M6	25.2	14.5	M6

CAP1.6

OPTIONS

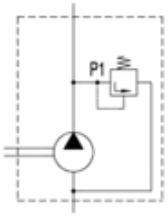

X1

DISCRIPTION
Pressure relief valve with internal drain ; setting pressure between 5 and 230 bar .

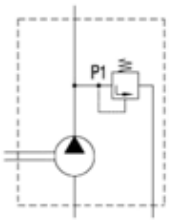

Y0

DISCRIPTION
Pressure relief valve with external drain ; setting pressure between 5 and 230 bar .

CHP2[CAP2]

HOW TO ORDER

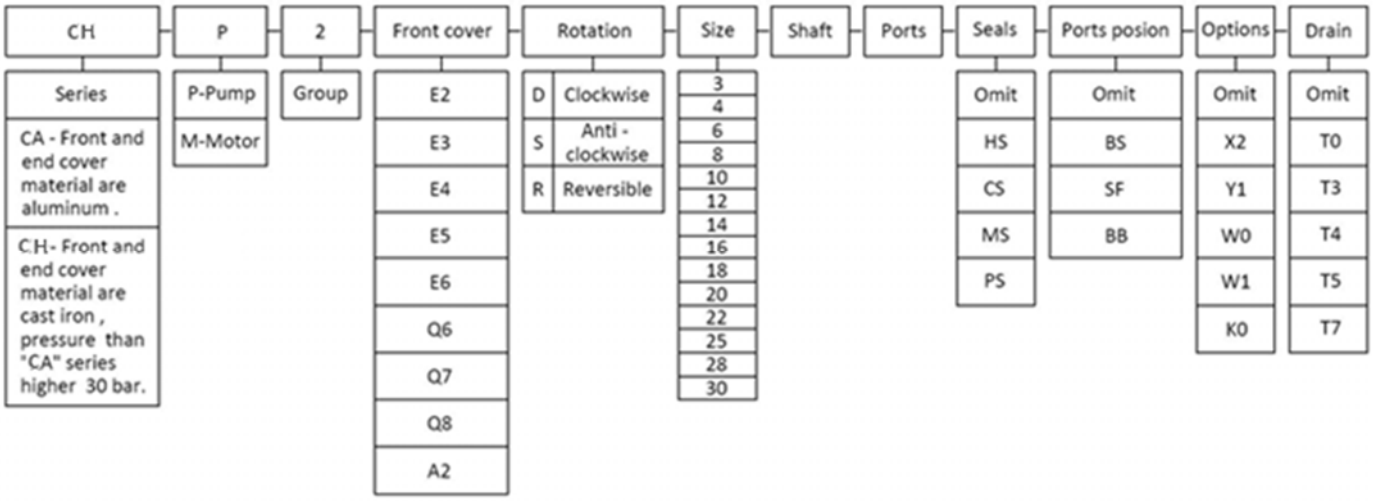

Seals

Omit - Range between -10℃and +80℃， inlet pressure up to max. 3 bar absolute (standard seal) .

HS - Version suitable for fluid at hi-temperatures , range between -10℃and +120℃ .

CS - Version suitable for fluid at low-temperatures , range between -40℃and +80℃ .

MS - Version suitable for inlet pressure up to max. 3 and 6 bar absolute .

PS - Version suitable for inlet pressure up to max. 3 and 10 bar absolute .

Ports position

Omit - Side inlet and side outlet .

BS - Back inlet and side outlet .

SF - Side inlet and front outlet .

BB - Back inlet and back outlet

Options

Omit - Have no valves .

X2 - Pressure valve with internal drain .

Y1 - Pressure valve with external drain.

W0 - Flow control vale with pressure valve .

W1 - Flow control vale with pressure valve .

K0 - Flow control vale .

Drain

Omit - Have no drain .

T0 - Internal drain .

T3 - External drain G1/4 .

T4 - External drain 7/16-20 UNF .

T5 - External drain 9/16-18 UNF .

T7 - External drain M12×1.5 .

Examples

CHP 2E2-D-12Z5F9 = **CH series** , 2 group pump , E2 front cover , clockwise , 12 cc/rev , Z5 shaft , F9 ports , standard seal , side inlet and side outlet .

CHP2E2

★ Use axial gap automatic compensation mechanism.

★ High sustained working pressure and long service life .

★ Anti fouling ability is strong and suitable for tractors , power units , machines and other kinds Of hydraulic systems .

OUTLET **INLET**

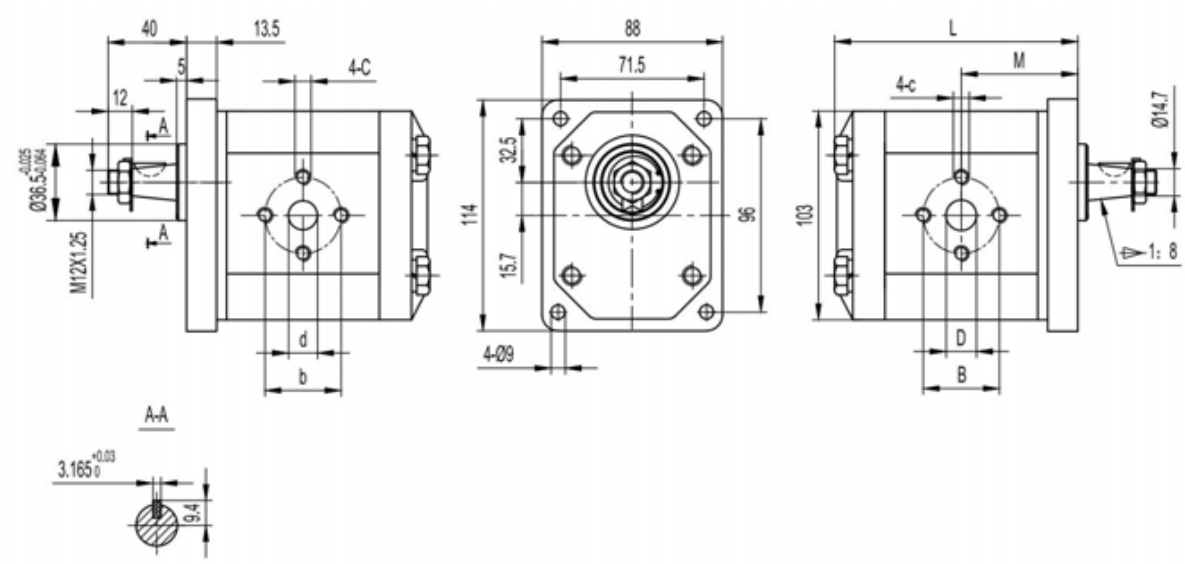

Type	Displacement	Max. pressure			Max. speed	Min. speed	Dimensions							
		P1	P2	P3			M	L	B	D	b	d	C	c
	(cm^3/rev)	bar	bar	bar	(r/min)	(r/min)	mm							
CHP2E2-D-3	3	200	225	250	4000	800	43.6	91.1	30	13	30	13	M6	M6
CHP2E2-D-4	4	200	225	250	4000	600	44.4	92.7	30	13	30	13	M6	M6
CHP2E2-D-6	6	200	225	250	4000	600	46	96	30	13	30	13	M6	M6
CHP2E2-D-8	8	200	225	250	3500	500	47.7	99.3	30	13	30	13	M6	M6
CHP2E2-D-10	10	200	225	250	3000	500	49.3	102.6	40	20	30	13	M8	M6
CHP2E2-D-12	12	200	225	250	3000	500	51	105.9	40	20	30	13	M8	M6
CHP2E2-D-14	14	200	225	250	3000	500	52.7	109.3	40	20	30	13	M8	M6
CHP2E2-D-16	16	200	225	250	3000	500	54.4	112.7	40	20	30	13	M8	M6
CHP2E2-D-18	18	200	225	250	3000	500	56	116	40	20	30	13	M8	M6
CHP2E2-D-20	20	200	225	250	3000	400	57.7	119.3	40	20	30	13	M8	M6
CHP2E2-D-22	22	200	225	250	3000	400	59.3	122.6	40	20	30	13	M8	M6
CHP2E2-D-25	25	200	215	230	3000	400	61.8	127.6	40	22	30	13	M8	M6
CHP2E2-D-28	28	180	190	200	2500	400	64.3	132.6	40	22	30	13	M8	M6
CHP2E2-D-30	30	160	170	180	2500	400	66	135.9	40	22	30	13	M8	M6

CHP2E3

★ Use axial gap automatic compensation mechanism.

★ High sustained working pressure and long service life .

★ Anti fouling ability is strong and suitable for tractors , power units , machines and other kinds 0f hydraulic systems .

OUTLET **INLET**

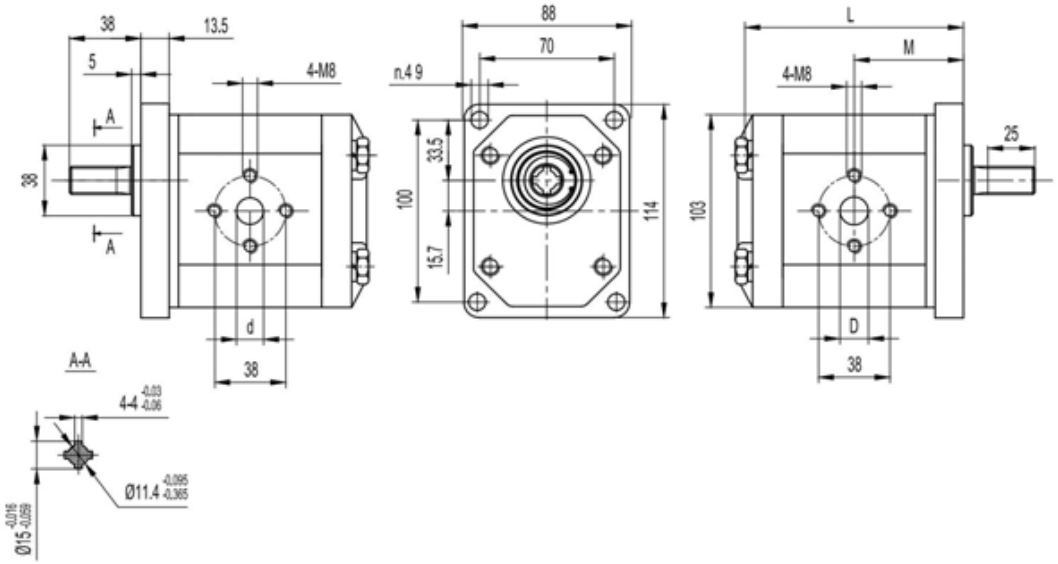

Type	Displacement	Max. pressure			Max.	Min.	Dimensions			
		P1	P2	P3	speed	speed	M	L	D	d
	(cm^3/rev)	bar	bar	bar	(r/min)	(r/min)	mm	mm	mm	mm
CHP2E3-D-3	3	200	225	250	4000	800	43.6	91.1	14	10
CHP2E3-D-4	4	200	225	250	4000	600	44.4	92.7	14	10
CHP2E3-D-6	6	200	225	250	4000	600	46	96	14	10
CHP2E3-D-8	8	200	225	250	3500	500	47.7	99.3	14	10
CHP2E3-D-10	10	200	225	250	3000	500	49.3	102.6	18	15
CHP2E3-D-12	12	200	225	250	3000	500	51	105.9	18	15
CHP2E3-D-14	14	200	225	250	3000	500	52.7	109.3	18	15
CHP2E3-D-16	16	200	225	250	3000	500	54.4	112.7	18	15
CHP2E3-D-18	18	200	225	250	3000	500	56	116	18	15
CHP2E3-D-20	20	200	225	250	3000	400	57.7	119.3	18	15
CHP2E3-D-22	22	200	225	250	3000	400	59.3	122.6	18	15
CHP2E3-D-25	25	200	215	230	3000	400	61.8	127.6	20	15
CHP2E3-D-28	28	180	190	200	2500	400	64.3	132.6	20	15
CHP2E3-D-30	30	160	170	180	2500	400	66	135.9	20	15

CHP2E4

★ Use axial gap automatic compensation mechanism.

★ High sustained working pressure and long service life .

★ Anti fouling ability is strong and suitable for tractors , power units , machines and other kinds Of hydraulic systems .

INLET **OUTLET**

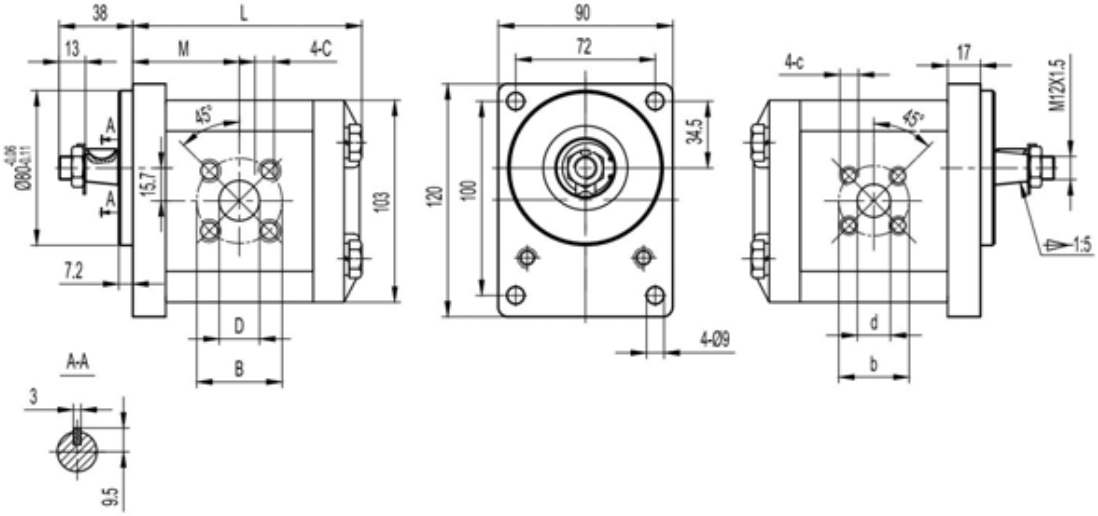

Type	Displacement	Max. pressure			Max.	Min.	Dimensions							
		P1	P2	P3	speed	speed	M	L	B	D	C	b	d	c
	(cm^3/rev)	bar	bar	bar	(r/min)	(r/min)	mm	mm	mm	mm		mm	mm	
CHP2E4-S-3	3	200	225	250	4000	800	43.6	91.1	40	15	M6	35	15	M6
CHP2E4-S-4	4	200	225	250	4000	600	44.4	92.7	40	15	M6	35	15	M6
CHP2E4-S-6	6	200	225	250	4000	600	46	96	40	15	M6	35	15	M6
CHP2E4-S-8	8	200	225	250	3500	500	47.7	99.3	40	15	M6	35	15	M6
CHP2E4-S-10	10	200	225	250	3000	500	49.3	102.6	40	20	M6	35	15	M6
CHP2E4-S-12	12	200	225	250	3000	500	51	105.9	40	20	M6	35	15	M6
CHP2E4-S-14	14	200	225	250	3000	500	52.7	109.3	40	20	M6	35	15	M6
CHP2E4-S-16	16	200	225	250	3000	500	54.4	112.7	40	20	M6	35	15	M6
CHP2E4-S-18	18	200	225	250	3000	500	56	116	40	20	M6	35	15	M6
CHP2E4-S-20	20	200	225	250	3000	400	57.7	119.3	40	20	M6	35	15	M6
CHP2E4-S-22	22	200	225	250	3000	400	59.3	122.6	40	20	M6	35	15	M6
CHP2E4-S-25	25	200	215	230	3000	400	61.8	127.6	40	20	M6	35	15	M6
CHP2E4-S-28	28	180	190	200	2500	400	64.3	132.6	40	20	M6	35	15	M6
CHP2E4-S-30	30	160	170	180	2500	400	66	135.9	40	20	M6	35	15	M6

CHP2E5

★ Use axial gap automatic compensation mechanism.

★ High sustained working pressure and long service life .

★ Anti fouling ability is strong and suitable for tractors , power units , machines and other kinds Of hydraulic systems .

OUTLET **INLET**

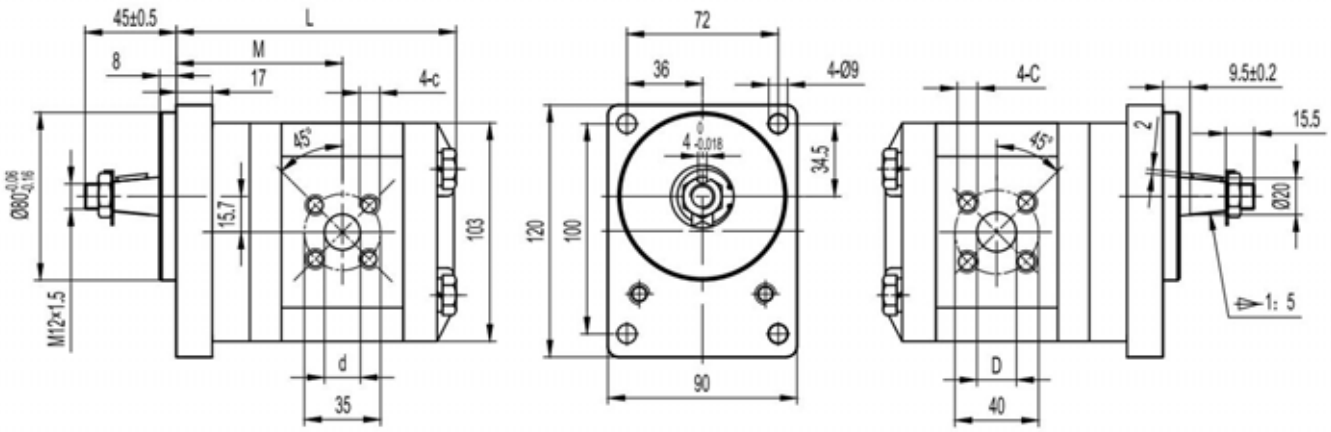

Type	Displacement	Max. pressure			Max. speed	Min. speed	Dimensions			
		P1	P2	P3			M	L	D	d
	(cm^3/rev)	bar	bar	bar	(r/min)	(r/min)	mm	mm	mm	mm
CHP2E5-D-3	3	200	225	250	4000	800	71.9	123.1	15	15
CHP2E5-D-4	4	200	225	250	4000	600	71.9	124.7	15	15
CHP2E5-D-6	6	200	225	250	4000	600	73.1	128.0	15	15
CHP2E5-D-8	8	200	225	250	3500	500	75.2	131.3	15	15
CHP2E5-D-10	10	200	225	250	3000	500	75.7	134.6	20	15
CHP2E5-D-12	12	200	225	250	3000	500	79.5	137.9	20	15
CHP2E5-D-14	14	200	225	250	3000	500	79.5	141.3	20	15
CHP2E5-D-16	16	200	225	250	3000	500	79.5	144.7	20	15
CHP2E5-D-18	18	200	225	250	3000	500	79.5	148.0	20	15
CHP2E5-D-20	20	200	225	250	3000	400	79.5	151.3	20	15
CHP2E5-D-22	22	200	225	250	3000	400	87.1	154.6	20	15
CHP2E5-D-25	25	200	215	230	3000	400	93.8	159.6	20	15
CHP2E5-D-28	28	180	190	200	2500	400	96.3	164.6	20	15
CHP2E5-D-30	30	160	170	180	2500	400	98.0	167.9	20	15

CHP2Q6

★ Use axial gap automatic compensation mechanism.

★ High sustained working pressure and long service life .

★ Anti fouling ability is strong and suitable for tractors , power units , machines and other kinds Of hydraulic systems .

OUTLET **INLET**

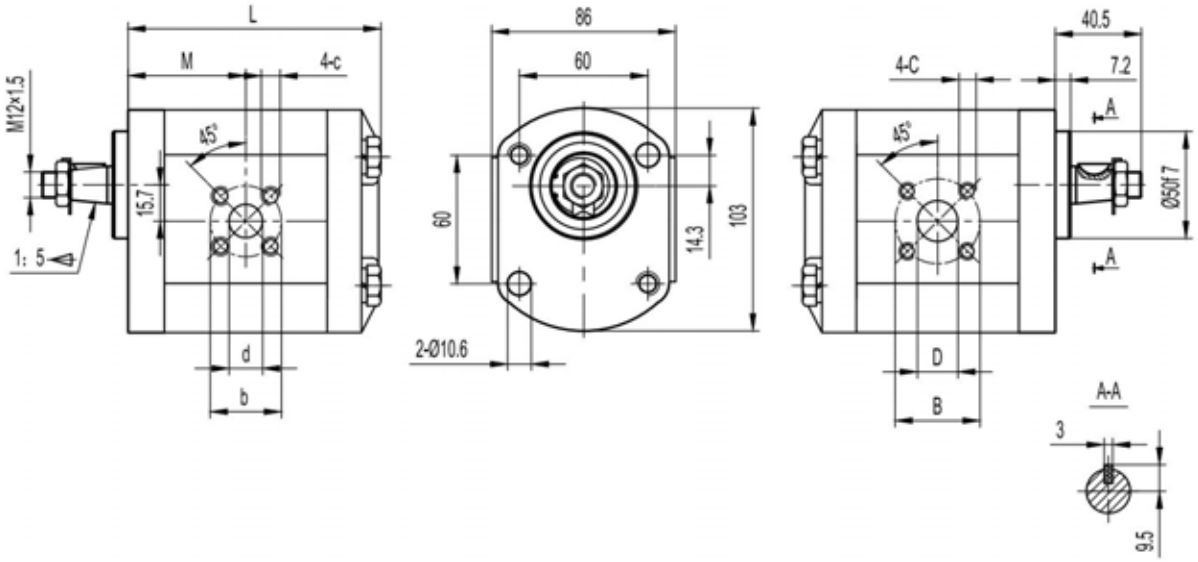

Type	Displacement	Max. pressure			Max.	Min.	Dimensions							
		P1	P2	P3	speed	speed	M	L	B	D	C	b	d	c
	(cm^3/rev)	bar	bar	bar	(r/min)	(r/min)	mm	mm	mm	mm		mm	mm	
CHP2Q6-D-3	3	200	225	250	4000	800	37.4	88.6	40	15	M6	35	15	M6
CHP2Q6-D-4	4	200	225	250	4000	600	37.4	90.2	40	15	M6	35	15	M6
CHP2Q6-D-6	6	200	225	250	4000	600	38.6	93.5	40	15	M6	35	15	M6
CHP2Q6-D-8	8	200	225	250	3500	500	40.7	96.8	40	15	M6	35	15	M6
CHP2Q6-D-10	10	200	225	250	3000	500	41.2	100.1	40	20	M6	35	15	M6
CHP2Q6-D-12	12	200	225	250	3000	500	45	103.4	40	20	M6	35	15	M6
CHP2Q6-D-14	14	200	225	250	3000	500	45	106.8	40	20	M6	35	15	M6
CHP2Q6-D-16	16	200	225	250	3000	500	45	110.2	40	20	M6	35	15	M6
CHP2Q6-D-18	18	200	225	250	3000	500	45	113.5	40	20	M6	35	15	M6
CHP2Q6-D-20	20	200	225	250	3000	400	45	116.8	40	20	M6	35	15	M6
CHP2Q6-D-22	22	200	225	250	3000	400	52.6	120.1	40	20	M6	35	15	M6
CHP2Q6-D-25	25	200	215	230	3000	400	59.3	125.1	40	20	M6	35	15	M6
CHP2Q6-D-28	28	180	190	200	2500	400	61.8	130.1	40	20	M6	35	15	M6
CHP2Q6-D-30	30	160	170	180	2500	400	63.5	133.4	40	20	M6	35	15	M6

CHP2Q7

★ Use axial gap automatic compensation mechanism.

★ High sustained working pressure and long service life .

★ Anti fouling ability is strong and suitable for tractors , power units , machines and other kinds Of hydraulic systems .

INLET **OUTLET**

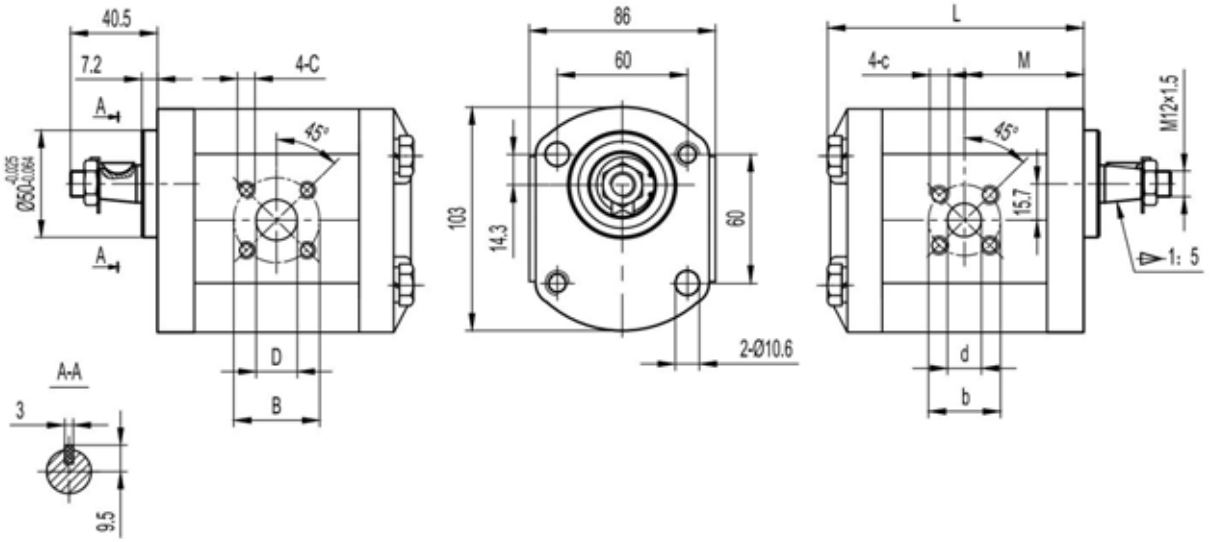

Type	Displacement	Max. pressure			Max.	Min.	Dimensions							
		P1	P2	P3	speed	speed	M	L	B	D	C	b	d	c
	(cm^3/rev)	bar	bar	bar	(r/min)	(r/min)	mm	mm	mm	mm		mm	mm	
CHP2Q7-S-3	3	200	225	250	4000	800	37.4	88.6	40	15	M6	35	15	M6
CHP2Q7-S-4	4	200	225	250	4000	600	37.4	90.2	40	15	M6	35	15	M6
CHP2Q7-S-6	6	200	225	250	4000	600	38.6	93.5	40	15	M6	35	15	M6
CHP2Q7-S-8	8	200	225	250	3500	500	40.7	96.8	40	15	M6	35	15	M6
CHP2Q7-S-10	10	200	225	250	3000	500	41.2	100.1	40	20	M6	35	15	M6
CHP2Q7-S-12	12	200	225	250	3000	500	45	103.4	40	20	M6	35	15	M6
CHP2Q7-S-14	14	200	225	250	3000	500	45	106.8	40	20	M6	35	15	M6
CHP2Q7-S-16	16	200	225	250	3000	500	45	110.2	40	20	M6	35	15	M6
CHP2Q7-S-18	18	200	225	250	3000	500	45	113.5	40	20	M6	35	15	M6
CHP2Q7-S-20	20	200	225	250	3000	400	45	116.8	40	20	M6	35	15	M6
CHP2Q7-S-22	22	200	225	250	3000	400	52.6	120.1	40	20	M6	35	15	M6
CHP2Q7-S-25	25	200	215	230	3000	400	59.3	125.1	40	20	M6	35	15	M6
CHP2Q7-S-28	28	180	190	200	2500	400	61.8	130.1	40	20	M6	35	15	M6
CHP2Q7-S-30	30	160	170	180	2500	400	63.5	133.4	40	20	M6	35	15	M6

CHP2Q8

★ Use axial gap automatic compensation mechanism.

★ High sustained working pressure and long service life .

★ Anti fouling ability is strong and suitable for tractors , power units , machines and other kinds Of hydraulic systems .

OUTLET **INLET**

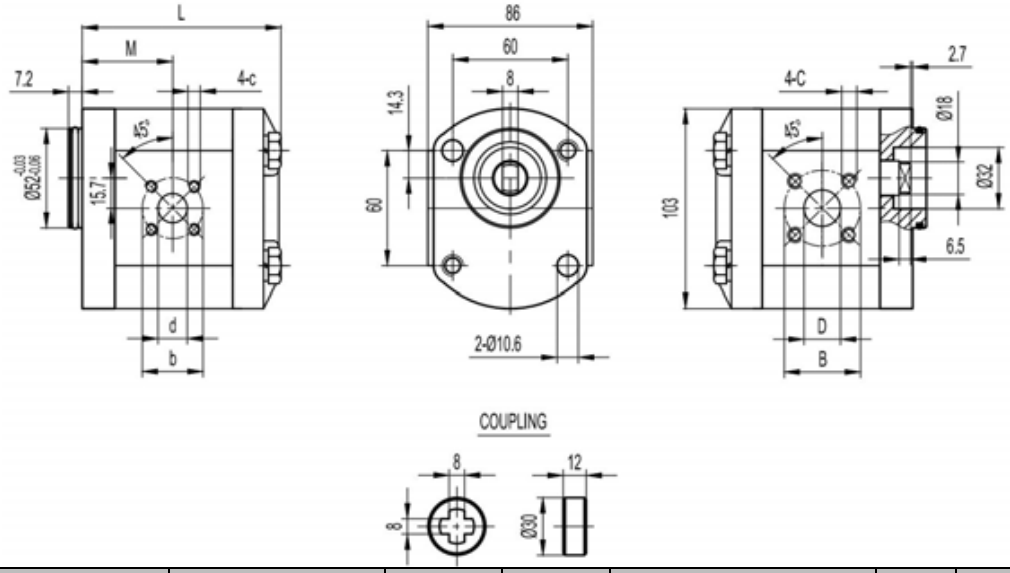

Type	Displacement	Max. pressure			Max.	Min.	Dimensions							
		P1	P2	P3	speed	speed	M	L	B	D	C	b	d	c
	(cm^3/rev)	bar	bar	bar	(r/min)	(r/min)	mm	mm	mm	mm		mm	mm	
CHP2Q8-D-3	3	200	225	250	4000	800	37.4	88.6	40	15	M6	35	15	M6
CHP2Q8-D-4	4	200	225	250	4000	600	37.4	90.2	40	15	M6	35	15	M6
CHP2Q8-D-6	6	200	225	250	4000	600	38.6	93.5	40	15	M6	35	15	M6
CHP2Q8-D-8	8	200	225	250	3500	500	40.7	96.8	40	15	M6	35	15	M6
CHP2Q8-D-10	10	200	225	250	3000	500	41.2	100.1	40	20	M6	35	15	M6
CHP2Q8-D-12	12	200	225	250	3000	500	45	103.4	40	20	M6	35	15	M6
CHP2Q8-D-14	14	200	225	250	3000	500	45	106.8	40	20	M6	35	15	M6
CHP2Q8-D-16	16	200	225	250	3000	500	45	110.2	40	20	M6	35	15	M6
CHP2Q8-D-18	18	200	225	250	3000	500	45	113.5	40	20	M6	35	15	M6
CHP2Q8-D-20	20	200	225	250	3000	400	45	116.8	40	20	M6	35	15	M6
CHP2Q8-D-22	22	200	225	250	3000	400	52.6	120.1	40	20	M6	35	15	M6
CHP2Q8-D-25	25	200	215	230	3000	400	59.3	125.1	40	20	M6	35	15	M6
CHP2Q8-D-28	28	180	190	200	2500	400	61.8	130.1	40	20	M6	35	15	M6
CHP2Q8-D-30	30	160	170	180	2500	400	63.5	133.4	40	20	M6	35	15	M6

CHP2A2

- ★ Use axial gap automatic compensation mechanism.
- ★ High sustained working pressure and long service life .
- ★ Anti fouling ability is strong and suitable for tractors , power units , machines and other kinds 0f hydraulic systems .

OUTLET **INLET**

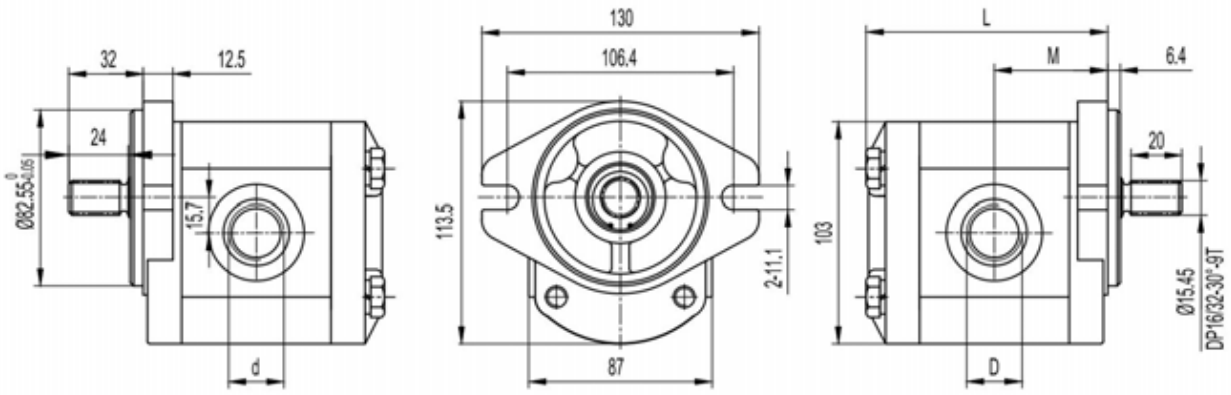

Type	Displacement	Max. pressure			Max. speed	Min. speed	Dimensions			
		P1	P2	P3			M	L	D	d
	(cm^3/rev)	bar	bar	bar	(r/min)	(r/min)	mm	mm		
CHP2A2-D-3	3	200	225	250	4000	800	43.6	91.1	G1/2	G1/2
CHP2A2-D-4	4	200	225	250	4000	600	44.4	92.7	G1/2	G1/2
CHP2A2-D-6	6	200	225	250	4000	600	46	96	G1/2	G1/2
CHP2A2-D-8	8	200	225	250	3500	500	47.7	99.3	G3/4	G1/2
CHP2A2-D-10	10	200	225	250	3000	500	49.3	102.6	G3/4	G1/2
CHP2A2-D-12	12	200	225	250	3000	500	51	105.9	G3/4	G1/2
CHP2A2-D-14	14	200	225	250	3000	500	52.7	109.3	G3/4	G1/2
CHP2A2-D-16	16	200	225	250	3000	500	54.4	112.7	G3/4	G1/2
CHP2A2-D-18	18	200	225	250	3000	500	56	116	G3/4	G1/2
CHP2A2-D-20	20	200	225	250	3000	400	57.7	119.3	G3/4	G1/2
CHP2A2-D-22	22	200	225	250	3000	400	59.3	122.6	G3/4	G1/2
CHP2A2-D-25	25	200	215	230	3000	400	61.8	127.6	G3/4	G1/2
CHP2A2-D-28	28	180	190	200	2500	400	64.3	132.6	G1	G3/4
CHP2A2-D-30	30	160	170	180	2500	400	66	135.9	G1	G3/4

CHP2A2-BB

- ★ Use axial gap automatic compensation mechanism.
- ★ High sustained working pressure and long service life .
- ★ Anti fouling ability is strong and suitable for tractors , power units , machines and other kinds Of hydraulic systems .

INLET **OUTLET**

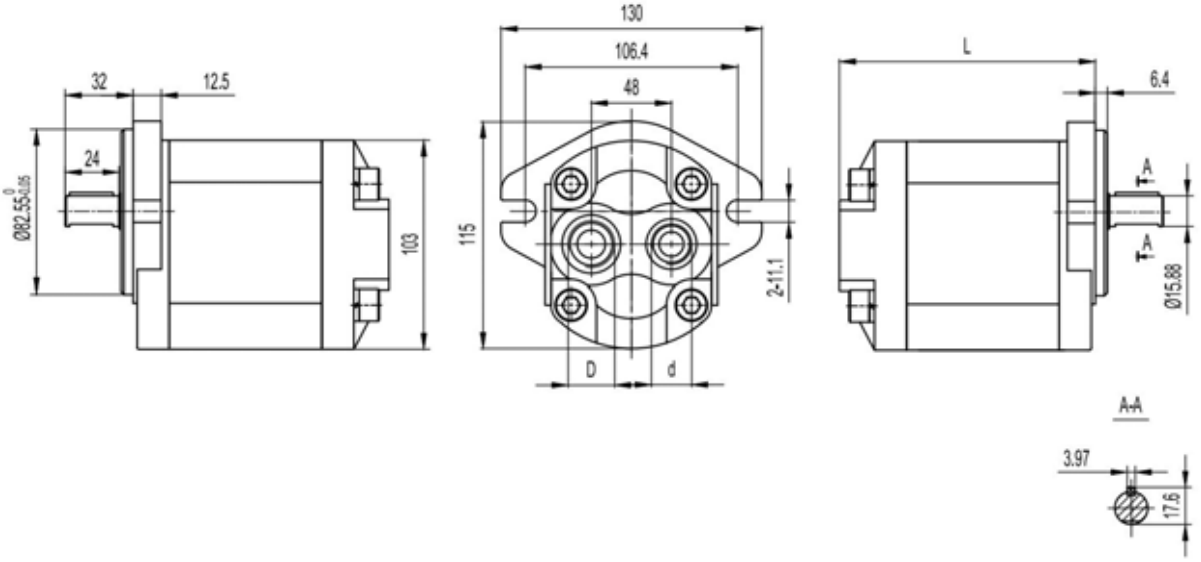

Type	Displacement	Max. pressure			Max. speed	Min. speed	Dimensions		
		P1	P2	P3			L	D	d
	(cm^3/rev)	bar	bar	bar	(r/min)	(r/min)	mm		
CHP2A2-S-3-BB	3	200	225	250	4000	800	103.1	1 1/16-12UNF	7/8-14UNF
CHP2A2-S-4-BB	4	200	225	250	4000	600	104.7	1 1/16-12UNF	7/8-14UNF
CHP2A2-S-6-BB	6	200	225	250	4000	600	108	1 1/16-12UNF	7/8-14UNF
CHP2A2-S-8-BB	8	200	225	250	3500	500	111.3	1 1/16-12UNF	7/8-14UNF
CHP2A2-S-10-BB	10	200	225	250	3000	500	114.6	1 1/16-12UNF	7/8-14UNF
CHP2A2-S-12-BB	12	200	225	250	3000	500	117.9	1 1/16-12UNF	7/8-14UNF
CHP2A2-S-14-BB	14	200	225	250	3000	500	121.3	1 1/16-12UNF	7/8-14UNF
CHP2A2-S-16-BB	16	200	225	250	3000	500	124.7	1 1/16-12UNF	7/8-14UNF
CHP2A2-S-18-BB	18	200	225	250	3000	500	128	1 1/16-12UNF	7/8-14UNF
CHP2A2-S-20-BB	20	200	225	250	3000	400	131.3	1 1/16-12UNF	7/8-14UNF
CHP2A2-S-22-BB	22	200	225	250	3000	400	134.6	1 1/16-12UNF	7/8-14UNF
CHP2A2-S-25-BB	25	200	215	230	3000	400	139.6	1 1/16-12UNF	7/8-14UNF
CHP2A2-S-28-BB	28	180	190	200	2500	400	144.6	1 1/16-12UNF	7/8-14UNF
CHP2A2-S-30-BB	30	160	170	180	2500	400	147.9	1 5/16-12UNF	7/8-14UNF

CHP2A2-W0T0

★ Use axial gap automatic compensation mechanism.

★ High sustained working pressure and long service life .

★ Anti fouling ability is strong and suitable for tractors , power units , machines and other kinds 0f hydraulic systems .

OUTLET **INLET**

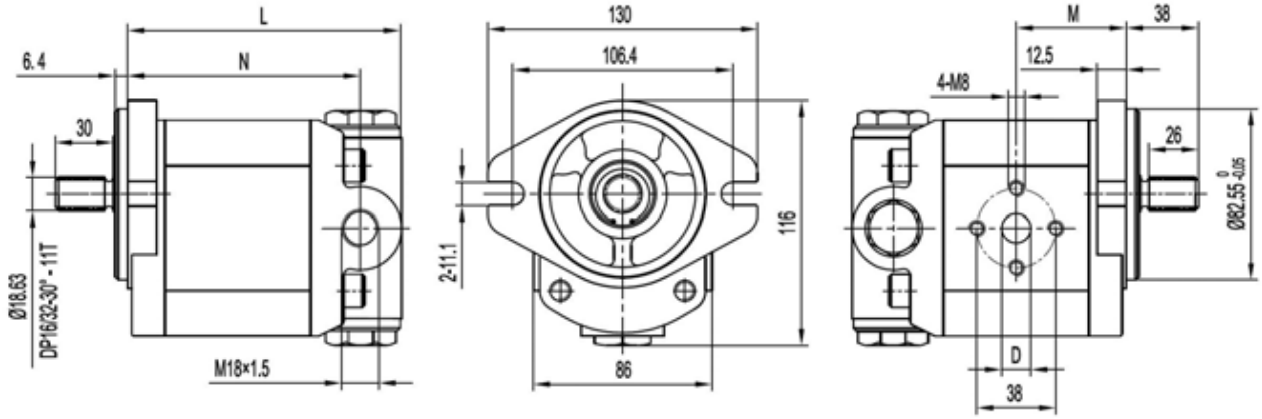

Type	Displacement	Control pressure	Control flow	Max. speed	Min. speed	Dimensions			
						L	M	N	D
	(cm³/rev)	bar	L/min	(r/min)	(r/min)	mm	mm	mm	mm
CHP2A2-D-3-W0T0	3	100～180	2～30	4000	800	112.1	43.6	92.1	14
CHP2A2-D-4-W0T0	4			4000	600	113.7	44.4	93.7	14
CHP2A2-D-6-W0T0	6			4000	600	117	46	97	14
CHP2A2-D-8-W0T0	8			3500	500	120.3	47.7	100.3	14
CHP2A2-D-10-W0T0	10			3000	500	123.6	49.3	103.6	18
CHP2A2-D-12-W0T0	12			3000	500	126.9	51	106.9	18
CHP2A2-D-14-W0T0	14			3000	500	130.3	52.7	110.3	18
CHP2A2-D-16-W0T0	16			3000	500	133.7	54.4	113.7	18
CHP2A2-D-18-W0T0	18			3000	500	137	56	117	18
CHP2A2-D-20-W0T0	20			3000	400	140.3	57.7	120.3	18
CHP2A2-D-22-W0T0	22			3000	400	143.6	59.3	123.6	20
CHP2A2-D-25-W0T0	25			3000	400	148.6	61.8	128.6	20
CHP2A2-D-28-W0T0	28			2500	400	153.6	64.3	133.6	20
CHP2A2-D-30-W0T0	30			2500	400	156.9	66	136.9	20

CHP2A2-W0T0

★ Use axial gap automatic compensation mechanism.

★ High sustained working pressure and long service life .

★ Anti fouling ability is strong and suitable for tractors , power units , machines and other kinds Of hydraulic systems .

INLET **OUTLET**

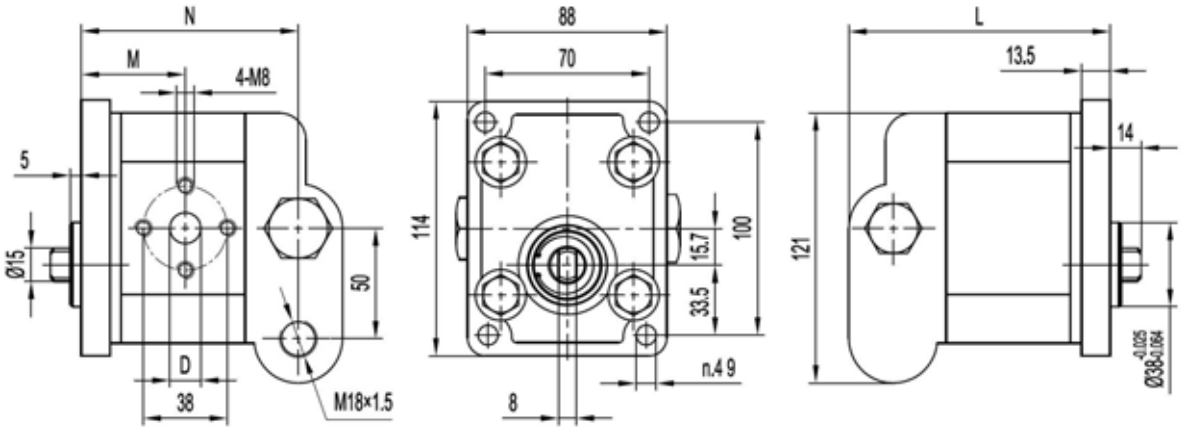

Type	Displacement	Control pressure	Control flow	Max. speed	Min. speed	Dimensions			
						L	M	N	D
	(cm³/rev)	bar	L/min	(r/min)	(r/min)	mm	mm	mm	mm
CHP2E6-D-3-W1T0	3	100～180	2～30	4000	800	112.1	43.6	96.1	13
CHP2E6-D-4-W1T0	4			4000	600	113.7	44.4	97.7	13
CHP2E6-D-6-W1T0	6			4000	600	117	46	101	13
CHP2E6-D-8-W1T0	8			3500	500	120.3	47.7	104.3	13
CHP2E6-D-10-W1T0	10			3000	500	123.6	49.3	107.6	19
CHP2E6-D-12-W1T0	12			3000	500	126.9	51	110.9	19
CHP2E6-D-14-W1T0	14			3000	500	130.3	52.7	114.3	19
CHP2E6-D-16-W1T0	16			3000	500	133.7	54.4	117.7	19
CHP2E6-D-18-W1T0	18			3000	500	137	56	121	19
CHP2E6-D-20-W1T0	20			3000	400	140.3	57.7	124.3	19
CHP2E6-D-22-W1T0	22			3000	400	143.6	59.3	127.6	19
CHP2E6-D-25-W1T0	25			3000	400	148.6	61.8	132.6	19
CHP2E6-D-28-W1T0	28			2500	400	153.6	64.3	137.6	19
CHP2E6-D-30-W1T0	30			2500	400	156.9	66	140.9	21

CHM2E2

★ Use axial gap automatic compensation mechanism.

★ High sustained working pressure and long service life .

★ Anti fouling ability is strong and suitable for tractors , power units , machines and other kinds Of hydraulic systems .

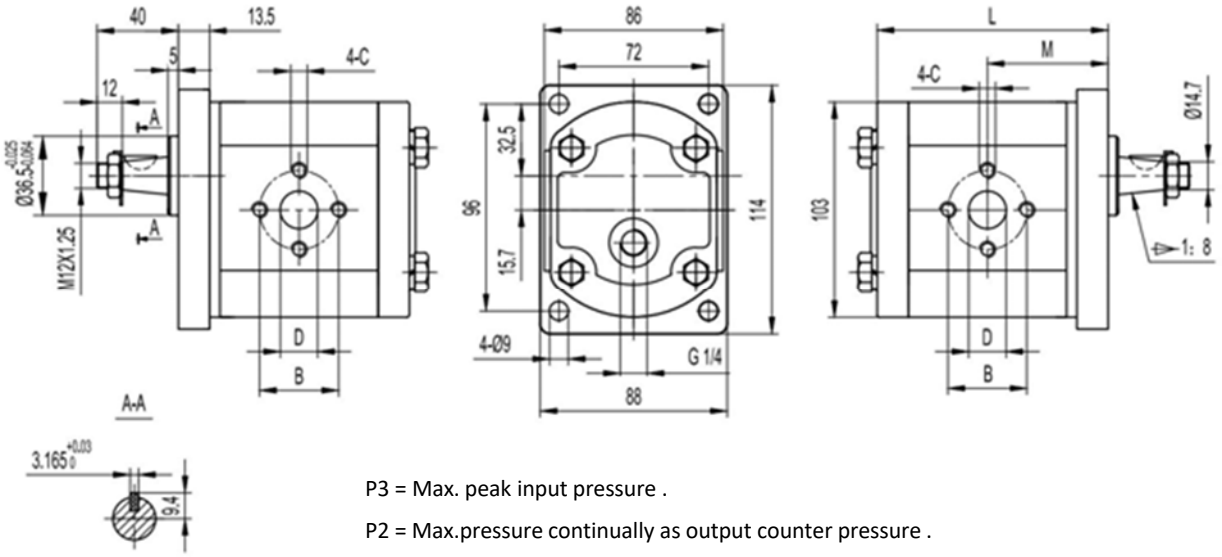

P3 = Max. peak input pressure .

P2 = Max.pressure continually as output counter pressure .

P1 = Max. peak input pressure continually .

Type	Displacement	Max. pressure			Max. speed	Min. speed	Dimensions				
		P1	P2	P3			M	L	B	D	H
	(cm^3/rev)	bar	bar	bar	(r/min)	(r/min)	mm	mm	mm	mm	
CHM2E2-R-3-T3	3	200	225	250	4000	800	43.6	91.1	30	13	M6
CHM2E2-R-4-T3	4	200	225	250	4000	600	44.4	92.7	30	13	M6
CHM2E2-R-6-T3	6	200	225	250	4000	600	46	96	30	13	M6
CHM2E2-R-8-T3	8	200	225	250	3500	500	47.7	99.3	30	13	M6
CHM2E2-R-10-T3	10	200	225	250	3000	500	49.3	102.6	40	20	M8
CHM2E2-R-12-T3	12	200	225	250	3000	500	51	105.9	40	20	M8
CHM2E2-R-14-T3	14	200	225	250	3000	500	52.7	109.3	40	20	M8
CHM2E2-R-16-T3	16	200	225	250	3000	500	54.4	112.7	40	20	M8
CHM2E2-R-18-T3	18	200	225	250	3000	500	56	116	40	20	M8
CHM2E2-R-20-T3	20	200	225	250	3000	400	57.7	119.3	40	20	M8
CHM2E2-R-22-T3	22	200	225	250	3000	400	59.3	122.6	40	20	M8
CHM2E2-R-25-T3	25	200	215	230	3000	400	61.8	127.6	40	22	M8
CHM2E2-R-28-T3	28	180	190	200	2500	400	64.3	132.6	40	22	M8
CHM2E2-R-30-T3	30	160	170	180	2500	400	66	135.9	40	22	M8

CHP2[CAP2]

FRONT COVER

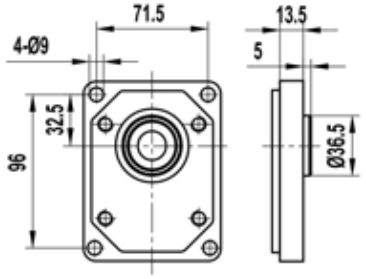

E2

SHAFTS

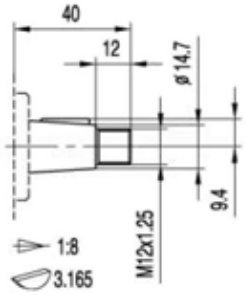

Z5

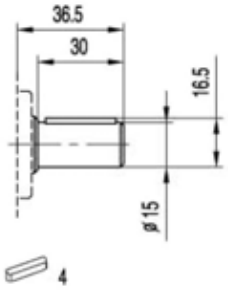

P6

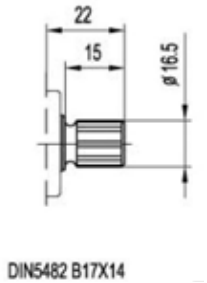

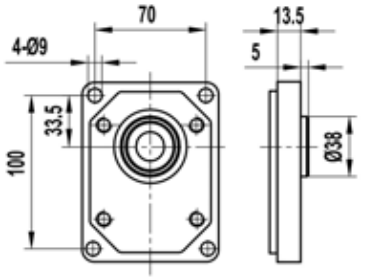

E3

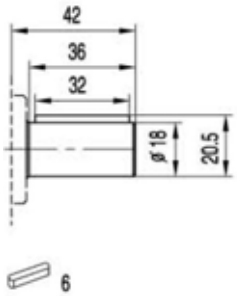

P7

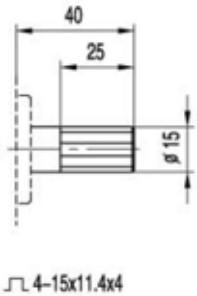

H0

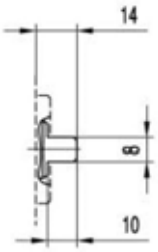

B6

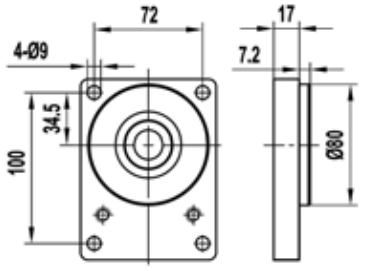

E4

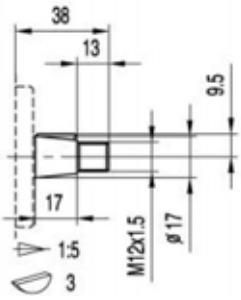

Z6

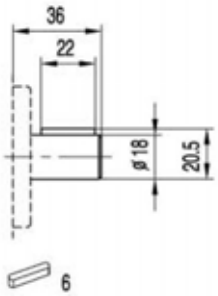

P8

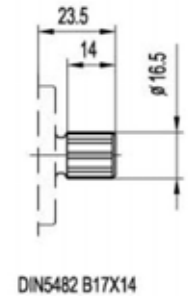

J3

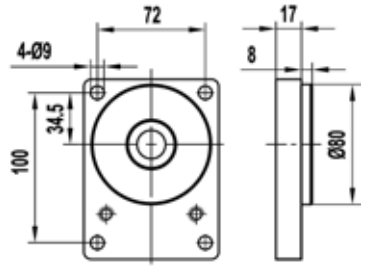

E5

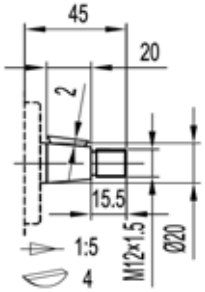

Z7

CHP2[CAP2]

FRONT COVER

SHAFTS

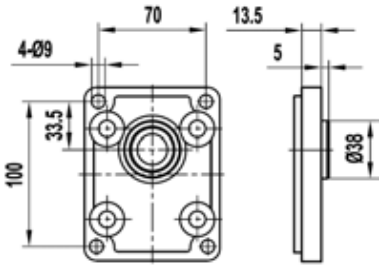

E6

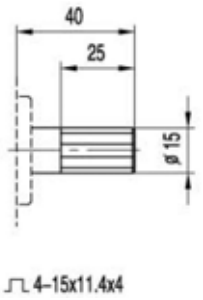

H0

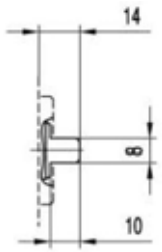

B6

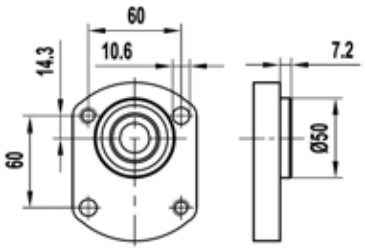

Q6

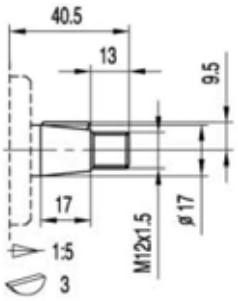

Z8

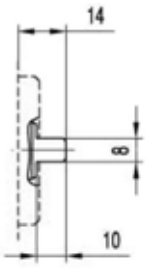

B6

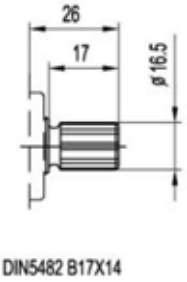

J4

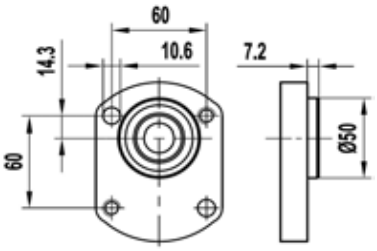

Q7

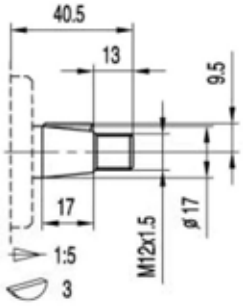

Z8

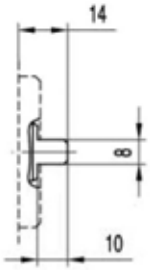

B6

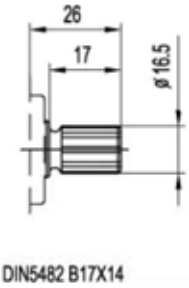

J4

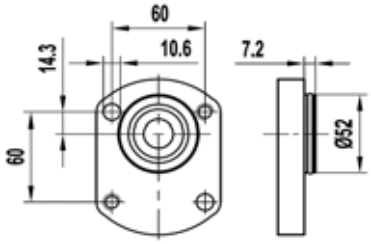

Q8

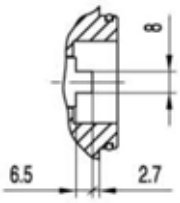

B7

CHP2[CAP2]

FRONT COVER

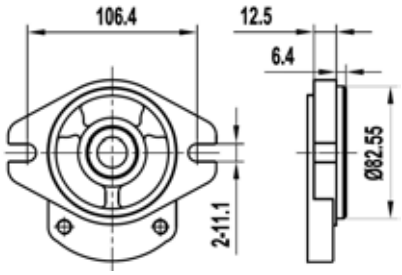

A2

SHAFTS

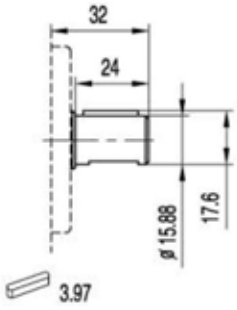

P9

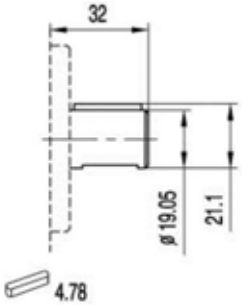

P10

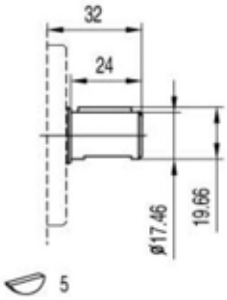

P11

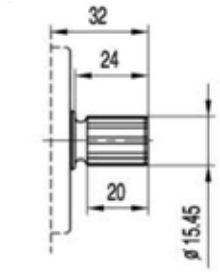

DP16/32-30° -9T

J5

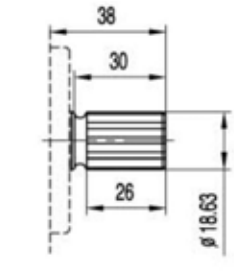

DP16/32-30° -11T

J6

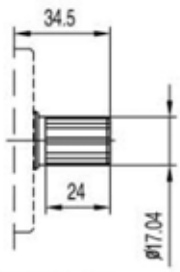

DP16/32-30° -10T

J7

CHP2[CAP2]

PORTS

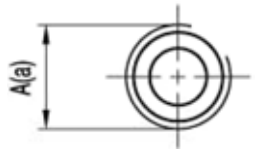

L4/L5/L6/L8

TYPE	CODE	INLET	OUTLET
		A	a
KG(A)P2..3 ~ KG(A)P2..6	L4	G1/2	G1/2
KG(A)P2..8 ~ KG(A)P2..30	L5	G3/4	G1/2
KG(A)P2..8 ~ KG(A)P2..30	L6	G3/4	G3/4
KG(A)P2..16 ~ KG(A)P2..30	L8	G1	G3/4

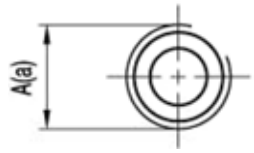

N2/N3/N5

TYPE	CODE	INLET	OUTLET
		A	a
KG(A)P2..3 ~ KG(A)P2..12	N2	PT1/2	PT1/2
KG(A)P2..14 ~ KG(A)P2..25	N3	PT3/4	PT1/2
KG(A)P2..28 ~ KG(A)P2..30	N5	PT1	PT3/4

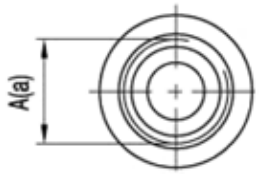

U2/U4/U6/U7

TYPE	CODE	INLET	OUTLET
		A	a
KG(A)P2..3 ~ KG(A)P2..28	U2	7/8-14UNF	3/4-16UNF
KG(A)P2..3 ~ KG(A)P2..28	U4	1 1/16-12UNF	7/8-14UNF
KG(A)P2..30	U6	1 5/16-12UNF	7/8-14UNF
KG(A)P2..8 ~ **CHP**(A)2..30	U7	1 5/16-12UNF	1 1/16-12UNF

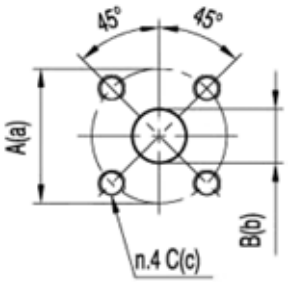

TYPE	CODE	INLET			OUTLET		
		A	B	C	a	b	c
KG(A)P2..3 ~ KG(A)P2..8	F30	40	15	M6	35	15	M6
KG(A)P2..10 ~ KG(A)P2..30	F31	40	20	M6	35	15	M6
KG(A)P2..16 ~ KG(A)P2..30	F35	55	26	M8	55	18	M8

CHP2[CAP2]

PORTS

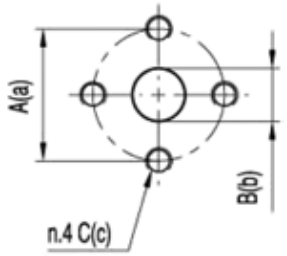

F2/F9/F12

TYPE	CODE	INLET			OUTLET		
		A	B	C	a	b	c
KG(A)P2..3 ～ KG(A)P2..8	F2	30	13	M6	30	13	M6
KG(A)P2..10 ～ KG(A)P2..22	F9	40	20	M8	30	13	M6
KG(A)P2..25 ～ KG(A)P2..30	F12	40	22	M8	30	13	M6

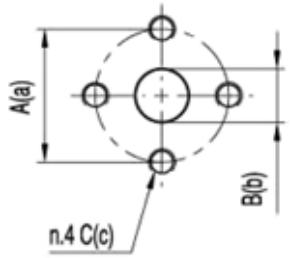

F3/F4/F5

TYPE	CODE	INLET			OUTLET		
		A	B	C	a	b	c
KG(A)P2..3 ～ KG(A)P2..8	F3	38	14	M8	38	10	M8
KG(A)P2..10 ～ KG(A)P2..22	F4	38	18	M8	38	15	M8
KG(A)P2..25 ～ KG(A)P2..30	F5	38	20	M8	38	15	M8

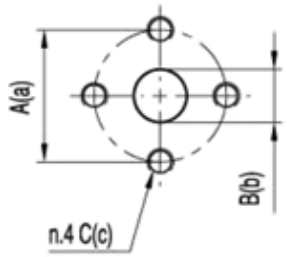

F6/F7/F8/F11

TYPE	CODE	INLET			OUTLET		
		A	B	C	a	b	c
KG(A)P2..8 ～ KG(A)P2..10	F6	40	13	M8	40	13	M8
KG(A)P2..12 ～ KG(A)P2..20	F7	40	19	M8	40	13	M8
KG(A)P2..22 ～ KG(A)P2..28	F8	40	19	M8	40	19	M8
KG(A)P2..30	F11	40	21	M8	40	19	M8

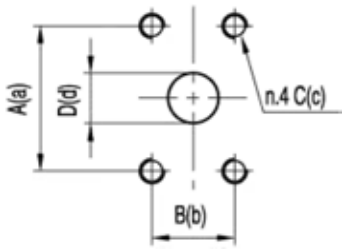

F60/F61/F62

TYPE	CODE	INLET				OUTLET			
		A	B	C	D	a	b	c	d
KG(A)P2..3 ～ KG(A)P2..16	F60	38.1	17.48	5/16-18UNC	13	38.1	17.48	5/16-18UNC	13
KG(A)P2..18 ～ KG(A)P2..20	F61	47.63	22.23	3/8-16UNC	20	38.1	17.48	5/16-18UNC	13
KG(A)P2..22 ～ KG(A)P2..30	F62	47.63	22.23	3/8-16UNC	20	47.63	22.23	3/8-16UNC	20

CHP2[CAP2]

OPTIONS

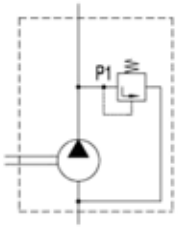

X2

DISCRIPTION
Pressure relief valve with internal drain ; setting pressure between 5 and 250 bar .

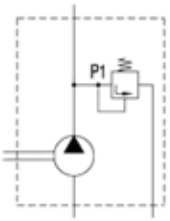

Y1

DISCRIPTION
Pressure relief valve with external drain ; setting pressure between 5 and 250 bar .

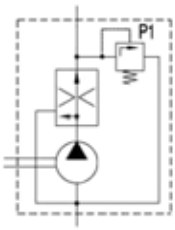

W0/W1

DISCRIPTION
3-way flow control valve with pressure relief valve ; excess flow returned to suction ; setting pressure between 100 and 180 bar ; control flow between 2 and 30 L/min .

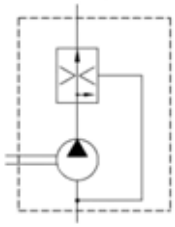

K0

DISCRIPTION
2-way flow control valve ; excess flow returned to suction ; control flow between 2 and 30 L/min .

CDP2.5

HOW TO ORDER

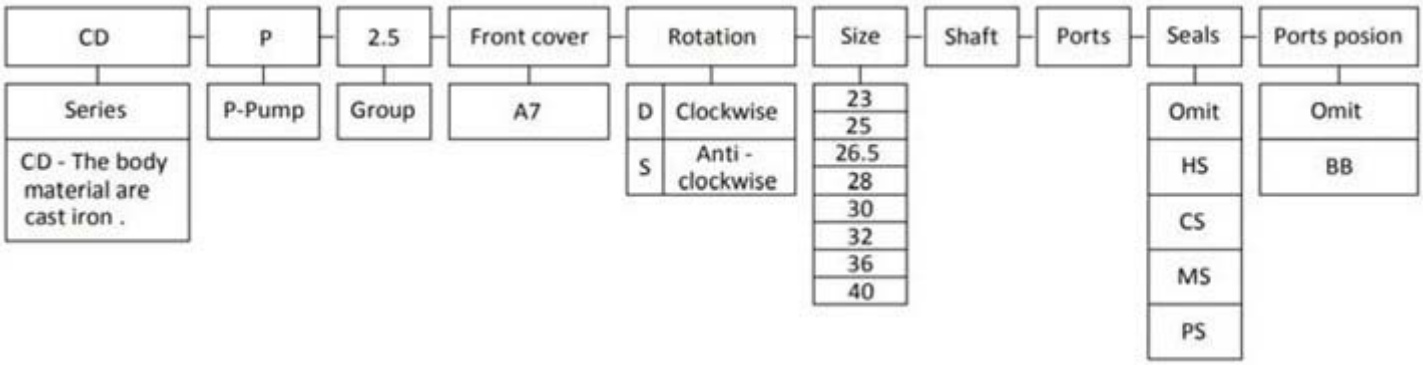

Seals

Omit - Range between -10℃and +80℃， inlet pressure up to max. 3 bar absolute (standard seal) .

HS - Version suitable for fluid at hi-temperatures , range between -10℃and +120℃ .

CS - Version suitable for fluid at low-temperatures , range between -40℃and +80℃ .

MS - Version suitable for inlet pressure up to max. 3 and 6 bar absolute .

PS - Version suitable for inlet pressure up to max. 3 and 10 bar absolute .

Ports position

Omit - Side inlet and side outlet .

BB - Back inlet and back outlet .

Examples

CDP2.5A7-D-32H2L7-BB = CA series , 2.5 group pump , A7 front cover , Clockwise , 32 cc/rev , H2 shaft , L7 ports , standard seal , Back inlet and back outlet .

CDP2.5A7-BB

★ Use axial gap automatic compensation mechanism.

★ High sustained working pressure and long service life .

★ Anti fouling ability is strong and suitable for forklift , power units , machines and other Kinds of hydraulic systems .

OUTLET **INLET**

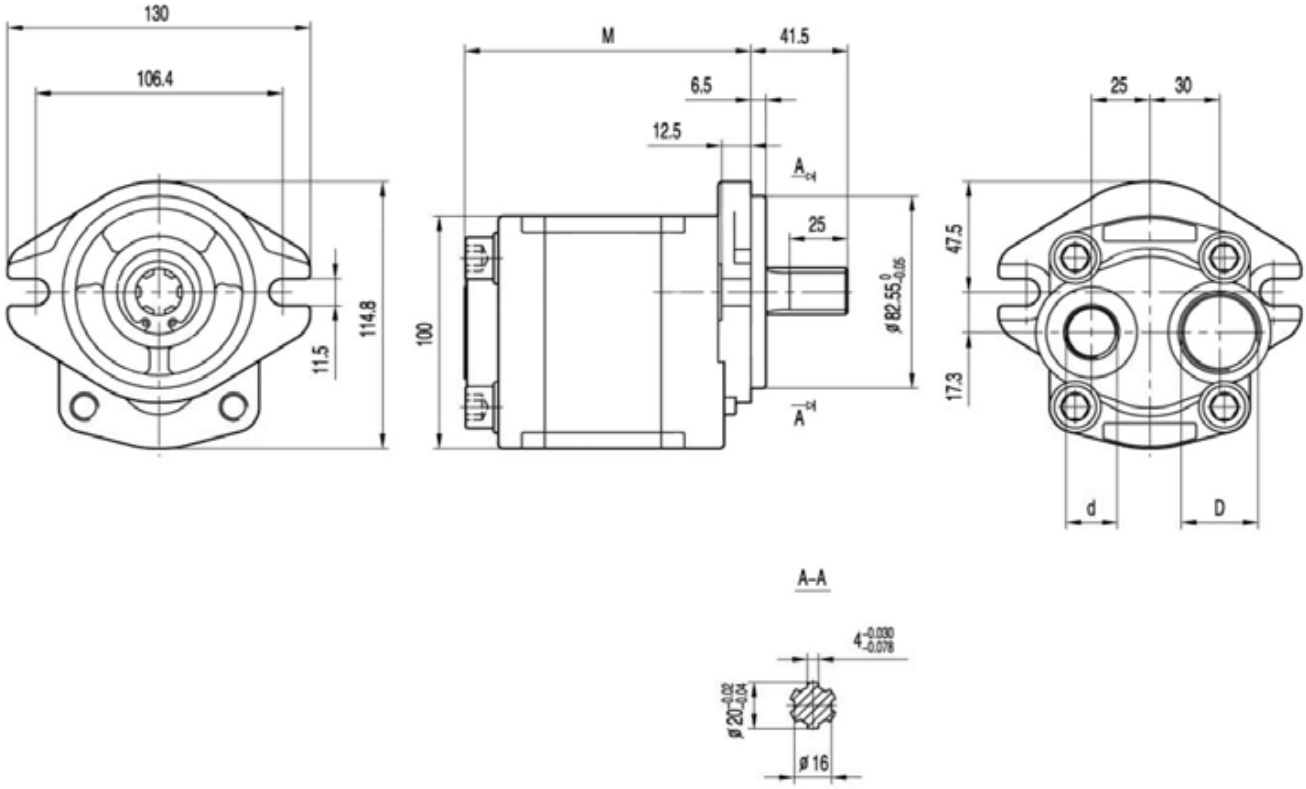

Type	Displacement	Max. pressure			Max. speed	Min. speed	Dimensions		
		P1	P2	P3			M	D	d
	(cm^3/rev)	bar	bar	bar	(r/min)	(r/min)	mm	mm	mm
CDP2.5A7-D-23-BB	23	200	225	250	3500	600	118	G1	G1/2
CDP2.5A7-D-25-BB	25	200	225	250	3500	600	120	G1	G1/2
CDP2.5A7-D-26.5-BB	26.5	200	225	250	3500	600	122	G1	G1/2
CDP2.5A7-D-28-BB	28	200	225	250	3500	600	124	G1	G1/2
CDP2.5A7-D-30-BB	30	200	225	250	3000	600	126	G1	G1/2
CDP2.5A7-D-32-BB	32	200	225	250	3000	600	129	G1	G1/2
CDP2.5A7-D-36-BB	36	200	225	250	2750	500	133	G1	G1/2
CDP2.5A7-D-40-BB	40	160	180	200	2500	500	138	G1	G1/2

CDP2.5A7

★ Use axial gap automatic compensation mechanism.

★ High sustained working pressure and long service life .

★ Anti fouling ability is strong and suitable for forklift , power units , machines and other Kinds of hydraulic systems .

OUTLET **INLET**

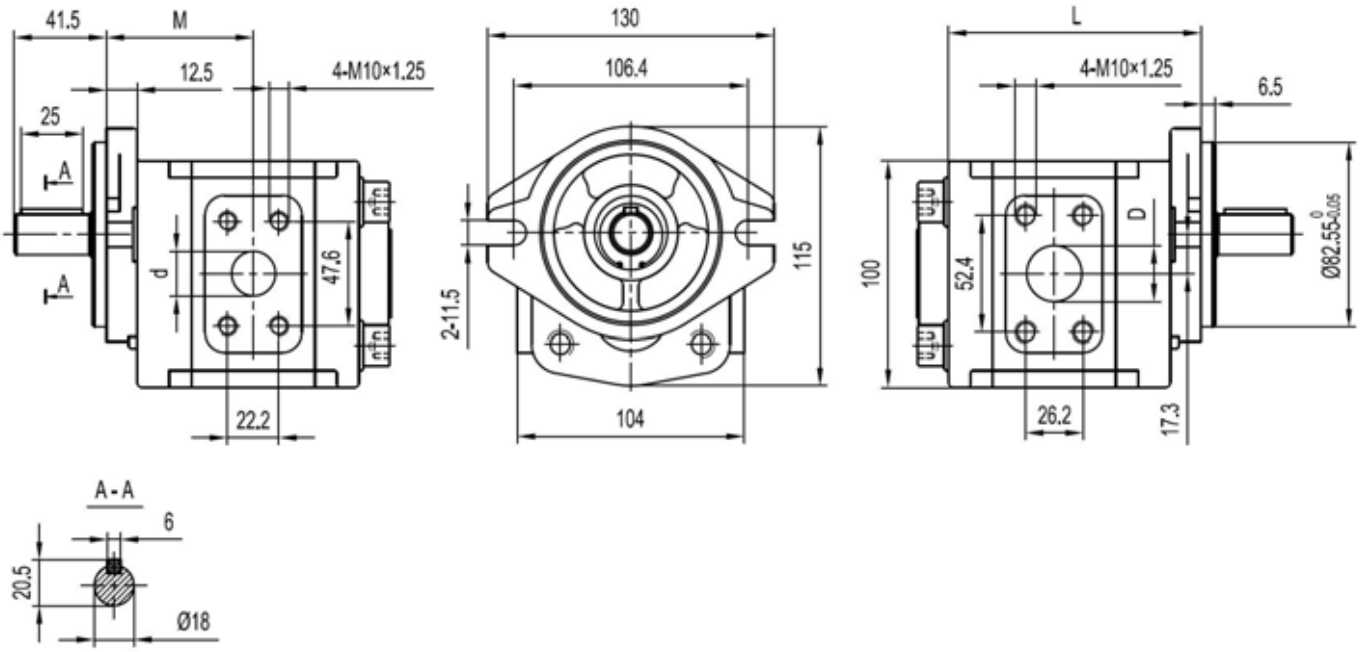

Type	Displacement	Max. pressure			Max. speed	Min. speed	Dimensions			
		P1	P2	P3			M	L	D	d
	(cm^3/rev)	bar	bar	bar	(r/min)	(r/min)	mm	mm	mm	mm
CDP2.5A7-D-23	23	200	225	250	3500	600	60.5	118	G1	G1/2
CDP2.5A7-D-25	25	200	225	250	3500	600	61.8	120	G1	G1/2
CDP2.5A7-D-26.5	26.5	200	225	250	3500	600	62.8	122	G1	G1/2
CDP2.5A7-D-28	28	200	225	250	3500	600	63.8	124	G1	G1/2
CDP2.5A7-D-30	30	200	225	250	3000	600	64.8	126	G1	G1/2
CDP2.5A7-D-32	32	200	225	250	3000	600	66.3	129	G1	G1/2
CDP2.5A7-D-36	36	200	225	250	2750	500	68.3	133	G1	G1/2
CDP2.5A7-D-40	40	160	180	200	2500	500	70.8	138	G1	G1/2

CDP2.5

FRONT COVER

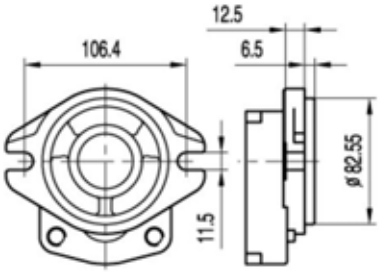

A7

SHAFTS

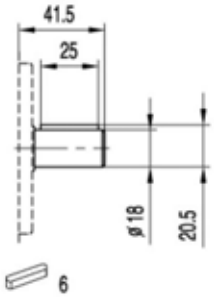

P17

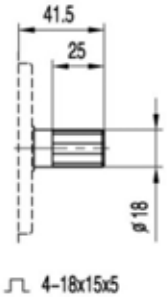

H2

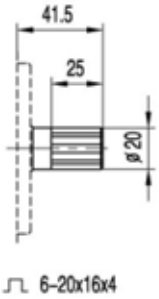

H3

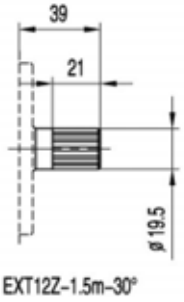

J13

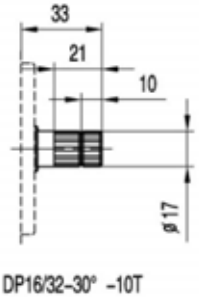

J14

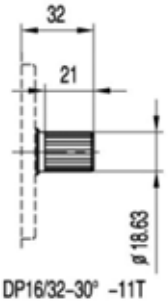

J15

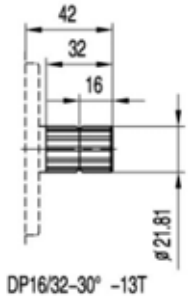

J16

CDP2.5

PORTS

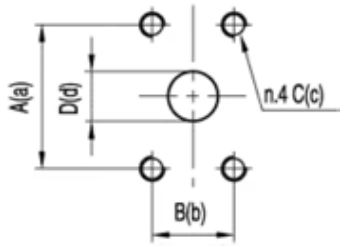

F65/F67

TYPE	CODE	INLET				OUTLET			
		A	B	C	D	a	b	c	d
CDP2.5..23 ～ **CDP**2.5..36	F65	52.4	26.2	M10×1.25	25	47.6	22.2	M10×1.25	20
CDP2.5..40	F67	52.4	26.2	M10×1.25	28	47.6	22.2	M10×1.25	20

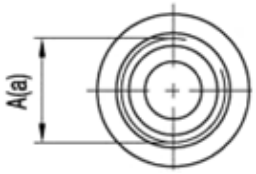

L7

TYPE	CODE	INLET	OUTLET
		A	a
CDP2.5..23 ～ **CDP**2.5..40	L7	G1	G1/2

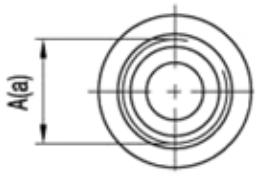

M16

TYPE	CODE	INLET	OUTLET
		A	a
CDP2.5..23 ～ **CDP**2.5..40	M16	M33×2	M22×1.5

CHP3

HOW TO ORDER

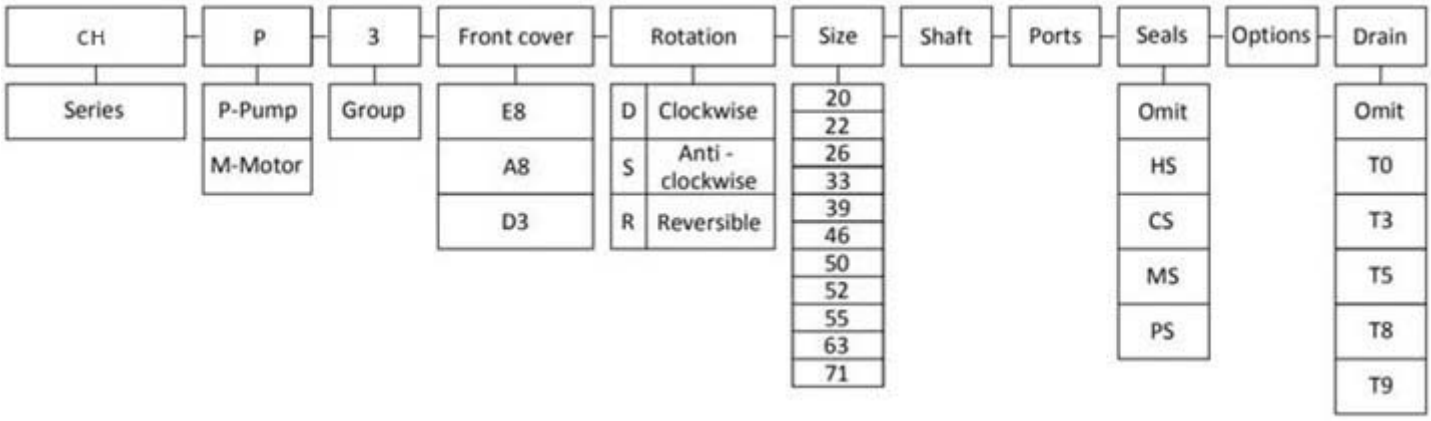

Seals

Omit - Range between -10℃and +80℃， inlet pressure up to max. 3 bar absolute (standard seal) .

HS - Version suitable for fluid at hi-temperatures , range between -10℃and +120℃ .

CS - Version suitable for fluid at low-temperatures , range between -40℃and +80℃ .

MS - Version suitable for inlet pressure up to max. 3 and 6 bar absolute .

PS - Version suitable for inlet pressure up to max. 3 and 10 bar absolute .

Drain

Omit - Have no drain .

T0 - Internal drain .

T3 - External drain G1/4 .

T5 - External drain 9/18-18 UNF .

T8 - External drain G3/8 .

T9 - External drain 3/4-16 UNF .

Examples

CHP3E8-D-33Z9F14 = **CH series** , 3 group pump , E8 front cover , clockwise , 33 cc/rev , Z9 shaft , F14 ports , standard seal , side inlet and side outlet .

CHP3E8

★ Use axial gap automatic compensation mechanism.

★ High sustained working pressure and long service life .

★ Anti fouling ability is strong and suitable for tractors , power units , machines and other kinds Of hydraulic systems .

OUTLET **INLET**

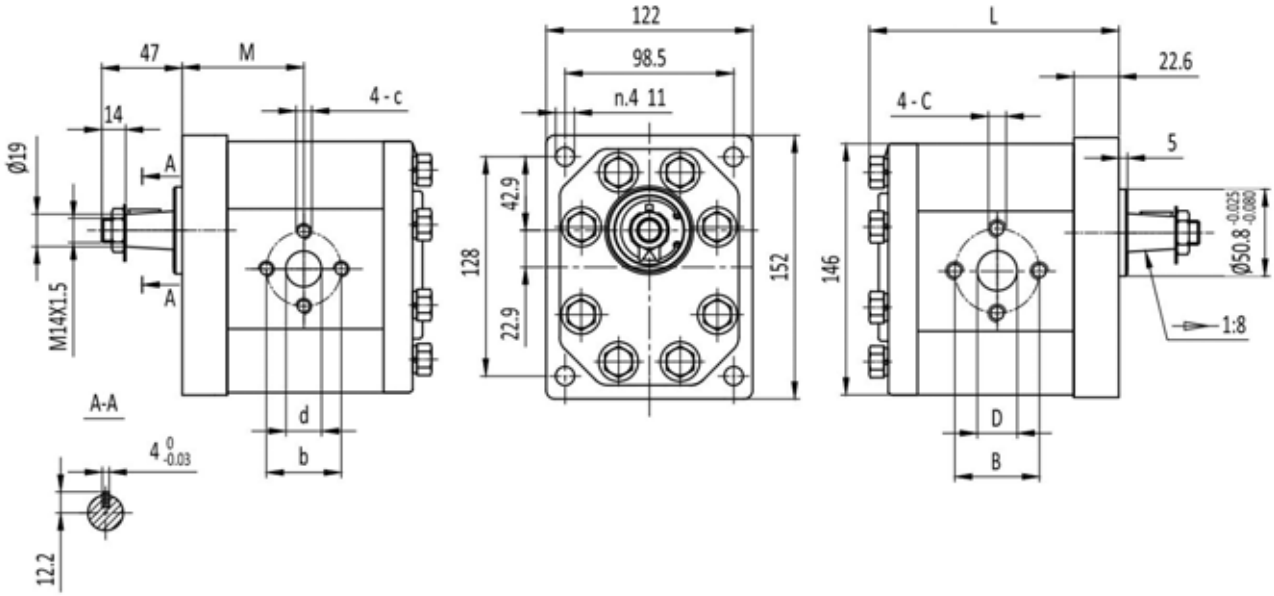

Type	Displacement	Max. pressure			Max.	Min.	Dimensions							
		P1	P2	P3	speed	speed	L	M	B	D	C	b	d	c
	(cm³/rev)	bar	bar	bar	(r/min)	(r/min)	mm	mm	mm	mm		mm	mm	
CHP3E8-D-20	20	200	225	250	3500	600	128	63	40	19	M8	40	19	M8
CHP3E8-D-22	22	200	225	250	3500	600	130	64	40	19	M8	40	19	M8
CHP3E8-D-26	26	200	225	250	3000	600	133	65	40	19	M8	40	19	M8
CHP3E8-D-33	33	200	225	250	3000	500	139	68	51	27	M10	40	19	M8
CHP3E8-D-39	39	200	225	250	3000	500	146	72	51	27	M10	40	19	M8
CHP3E8-D-46	46	200	225	250	3000	500	152	75	51	27	M10	40	19	M8
CHP3E8-D-50	50	200	225	250	3000	500	156	77	51	27	M10	40	19	M8
CHP3E8-D-52	52	200	225	250	3000	500	158	78	51	27	M10	40	19	M8
CHP3E8-D-55	55	200	230	250	2800	400	160	79	51	27	M10	40	19	M8
CHP3E8-D-63	63	200	230	250	2800	400	168	83	62	33	M10	51	27	M10
CHP3E8-D-71	71	180	200	220	2500	400	175	86	62	33	M10	51	27	M10

CHP3A8

★ Use axial gap automatic compensation mechanism.

★ High sustained working pressure and long service life .

★ Anti fouling ability is strong and suitable for tractors , power units , machines and other kinds 0f hydraulic systems .

OUTLET **INLET**

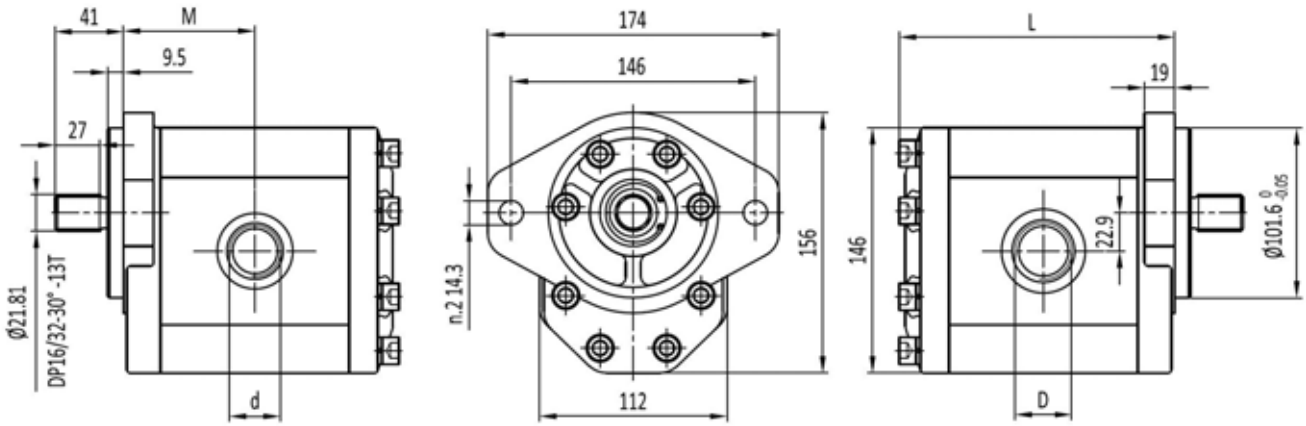

Type	Displacement	Max. pressure			Max.	Min.	Dimensions			
		P1	P2	P3	speed	speed	L	M	D	d
	(cm^3/rev)	bar	bar	bar	(r/min)	(r/min)	mm	mm		
CHP3A8-D-20	20	200	225	250	3500	600	128	63	G3/4	G3/4
CHP3A8-D-22	22	200	225	250	3500	600	130	64	G3/4	G3/4
CHP3A8-D-26	26	200	225	250	3000	600	133	65	G1	G3/4
CHP3A8-D-33	33	200	225	250	3000	500	139	68	G1	G3/4
CHP3A8-D-39	39	200	225	250	3000	500	146	72	G1	G3/4
CHP3A8-D-46	46	200	225	250	3000	500	152	75	G1 1/4	G1
CHP3A8-D-50	50	200	225	250	3000	500	156	77	G1 1/4	G1
CHP3A8-D-52	52	200	225	250	3000	500	158	78	G1 1/4	G1
CHP3A8-D-55	55	200	230	250	2800	400	160	79	G1 1/4	G1
CHP3A8-D-63	63	200	230	250	2800	400	168	83	G1 1/4	G1
CHP3A8-D-71	71	180	200	220	2500	400	175	86	G1 1/2	G1 1/4

CHM3E8

★ Use axial gap automatic compensation mechanism.

★ High sustained working pressure and long service life .

★ Anti fouling ability is strong and suitable for tractors , power units , machines and other kinds Of hydraulic systems .

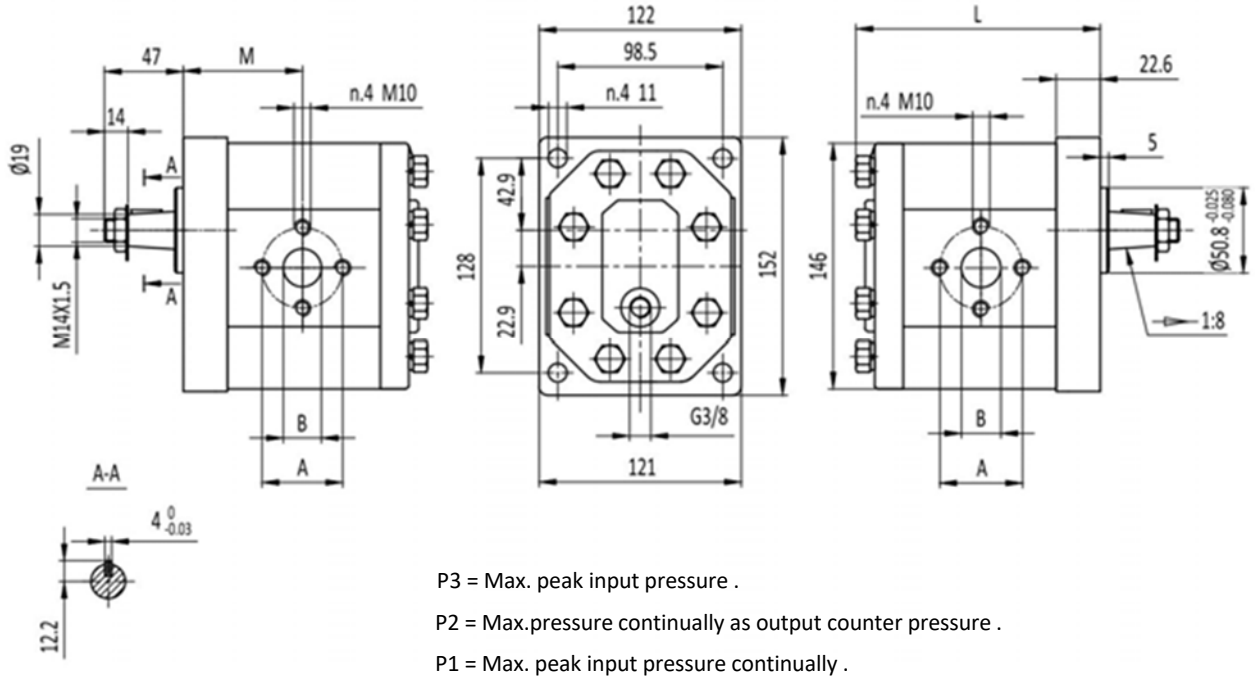

P3 = Max. peak input pressure .

P2 = Max.pressure continually as output counter pressure .

P1 = Max. peak input pressure continually .

Type	Displacement	Max. pressure			Max.	Min.	Dimensions			
		P1	P2	P3	speed	speed	L	M	A	B
	(cm^3/rev)	bar	bar	bar	(r/min)	(r/min)	mm	mm		
CHM3E8-R-20-T8	20	200	225	250	3500	600	128	63	56	27
CHM3E8-R-22-T8	22	200	225	250	3500	600	130	64	56	27
CHM3E8-R-26-T8	26	200	225	250	3000	600	133	65	56	27
CHM3E8-R-33-T8	33	200	225	250	3000	500	139	68	56	27
CHM3E8-R-39-T8	39	200	225	250	3000	500	146	72	56	27
CHM3E8-R-46-T8	46	200	225	250	3000	500	152	75	51	27
CHM3E8-R-50-T8	50	200	225	250	3000	500	156	77	56	27
CHM3E8-R-52-T8	52	200	225	250	3000	500	158	78	56	27
CHM3E8-R-55-T8	55	200	230	250	2800	400	160	79	62	33
CHM3E8-R-63-T8	63	200	230	250	2800	400	168	83	62	33
CHM3E8-R-71-T8	71	180	200	220	2500	400	175	86	62	33

CHP3D3

★ Use axial gap automatic compensation mechanism.

★ High sustained working pressure and long service life .

★ Anti fouling ability is strong and suitable for tractors , power units , machines and other kinds Of hydraulic systems .

OUTLET **INLET**

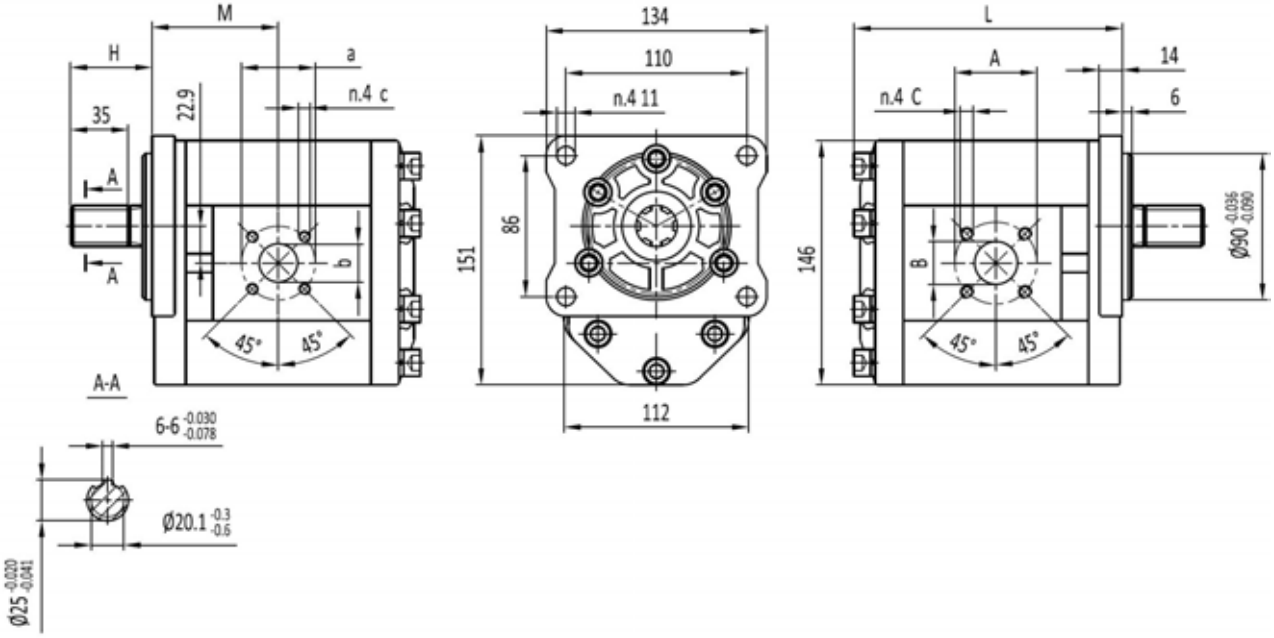

Type	Displacement	Max. pressure			Max. speed	Min. speed	Dimensions								
		P1	P2	P3			L	M	H	A	B	a	b	C	c
	(cm^3/rev)	bar	bar	bar	(r/min)	(r/min)	mm								
CHP3D3-D-20	20	200	225	250	3500	600	128	63	48	50	20	50	16.5	M8	M8
CHP3D3-D-22	22	200	225	250	3500	600	130	64	48	50	20	50	16.5	M8	M8
CHP3D3-D-26	26	200	225	250	3000	600	133	65	48	50	20	50	20	M8	M8
CHP3D3-D-33	33	200	225	250	3000	500	139	68	48	65	25	65	20	M8	M8
CHP3D3-D-39	39	200	225	250	3000	500	146	72	48	65	25	65	20	M8	M8
CHP3D3-D-46	46	200	225	250	3000	500	152	75	48	65	25	65	20	M8	M8
CHP3D3-D-50	50	200	225	250	3000	500	156	77	51	76	33	76	25	M10	M10
CHP3D3-D-52	52	200	225	250	3000	500	158	78	51	76	33	76	25	M10	M10
CHP3D3-D-55	55	200	230	250	2800	400	160	79	51	76	33	76	25	M10	M10
CHP3D3-D-63	63	200	230	250	2800	400	168	83	51	76	33	76	25	M10	M10
CHP3D3-D-71	71	180	200	220	2500	400	175	86	51	76	33	76	25	M10	M10

CHP3

FRONT COVER

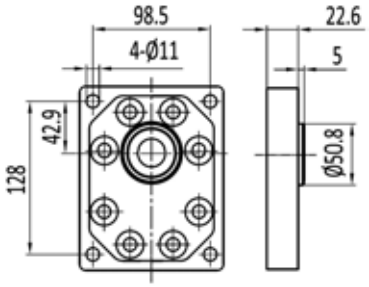

E8

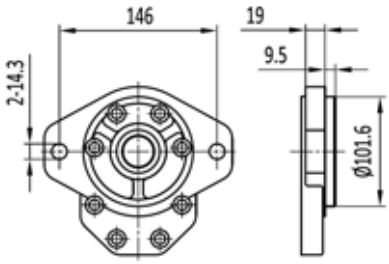

A8

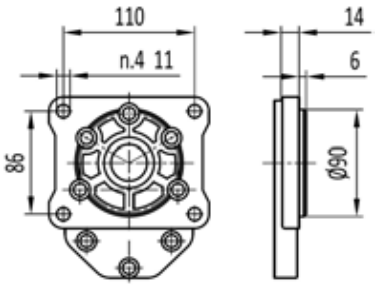

D3

SHAFTS

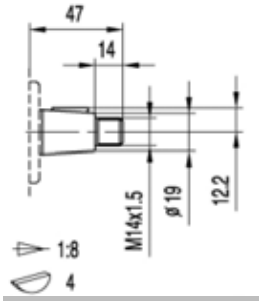

Z9

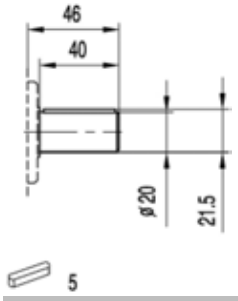

P21

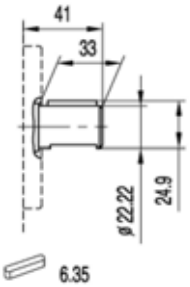

P16

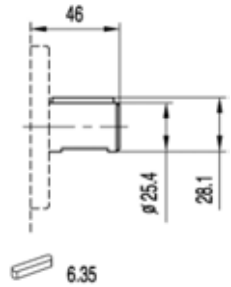

P20

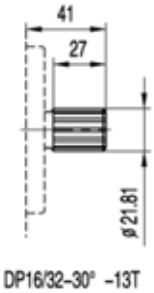

J17

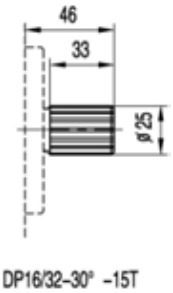

J18

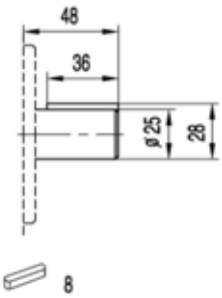

P18

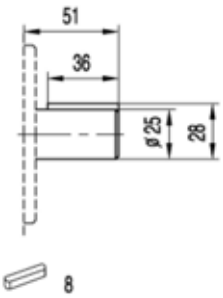

P19

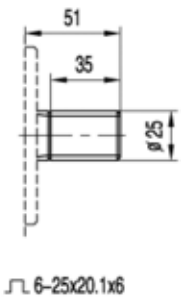

H5

CHP3

PORTS

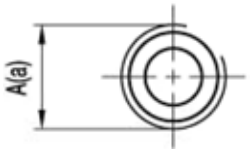

L6/L8/L10/L12

TYPE	CODE	INLET	OUTLET
		A	a
CHP3..20 ~ **CHP**3..22	L6	G3/4	G3/4
CHP3..26 ~ **CHP**3..39	L8	G1	G3/4
CHP3..46 ~ **CHP**3..63	L10	G1 1/4	G1
CHP3..71	L12	G1 1/2	G1 1/4

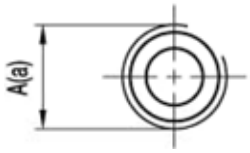

N4/N5/N7/N9

TYPE	CODE	INLET	OUTLET
		A	a
CHP3..20 ~ **CHP**3..22	N4	PT3/4	PT3/4
CHP3..26 ~ **CHP**3..39	N5	PT1	PT3/4
CHP3..46 ~ **CHP**3..63	N7	PT1 1/4	PT1
CHP3..71	N9	PT1 1/2	PT1 1/4

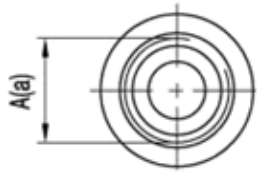

U7/U9/U10

TYPE	CODE	INLET	OUTLET
		A	a
CHP3..20 ~ **CHP**3..33	U7	1 5/16-12UNF	1 1/16-12UNF
CHP3..39 ~ **CHP**3..52	U9	1 5/8-12UNF	1 1/16-12UNF
CHP3..55 ~ **CHP**3..71	U10	1 7/8-12UNF	1 5/16-12UNF

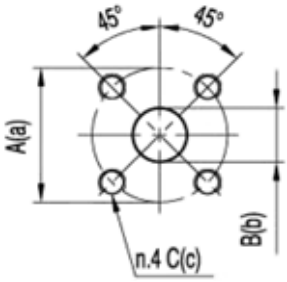

F32/F36/F37/F38/F39

TYPE	CODE	INLET			OUTLET		
		A	B	C	a	b	c
CHP3..20 ~ **CHP**3..26	F32	50	20	M8	50	20	M8
CHP3..20 ~ **CHP**3..71	F36	55	27	M8	55	19	M8
CHP3..33 ~ **CHP**3..46	F37	65	25	M8	65	20	M8
CHP3..50 ~ **CHP**3..63	F38	76	33	M8	76	25	M8
CHP3..50 ~ **CHP**3..71	F39	76	33	M10	76	25	M10

CHP3

PORTS

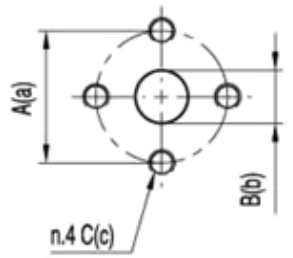

F8/F14/F15/F16/F17/F18

TYPE	CODE	INLET			OUTLET		
		A	B	C	a	b	c
CHP3..20 ~ **CHP**3..26	F 8	40	19	M8	40	19	M8
CHP3..33 ~ **CHP**3..55	F14	51	27	M10	40	19	M8
CHP3..20 ~ **CHP**3..39	F16	56	27	M10	56	19	M10
CHP3..46	F15	51	27	M10	51	27	M10
CHP3..50 ~ **CHP**3..52	F17	56	27	M10	56	27	M10
CHP3..55 ~ **CHP**3..71	F18	62	33	M10	51	27	M10

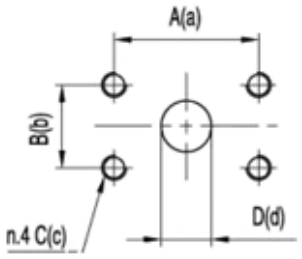

F84/F85/F86/F87

TYPE	CODE	INLET				OUTLET			
		A	B	C	D	a	b	c	d
CHP3..20 ~ **CHP**3..25	F84	57.2	26	M10	25	57.2	26	M10	20
CHP3..32	F85	57.2	26	M10	30	57.2	26	M10	20
CHP3..40	F86	57.2	26	M10	35	57.2	26	M10	20
CHP3..50 ~ **CHP**3..63	F87	57.2	26	M10	35	57.2	26	M10	25

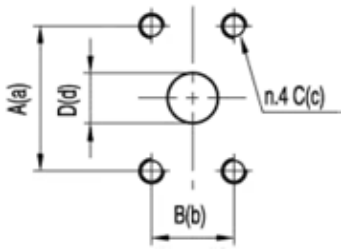

F66/F68

TYPE	CODE	INLET				OUTLET			
		A	B	C	D	a	b	c	d
CHP3..20 ~ **CHP**3..52	F66	52.4	26.2	3/8-16UNC	27	47.6	22.2	3/8-16UNC	19
CHP3..55 ~ **CHP**3..71	F68	58.7	30.2	7/16-14UNC	33	52.4	26.2	3/8-16UNC	27

CAP1/1[HLP1/1]

HOW TO ORDER

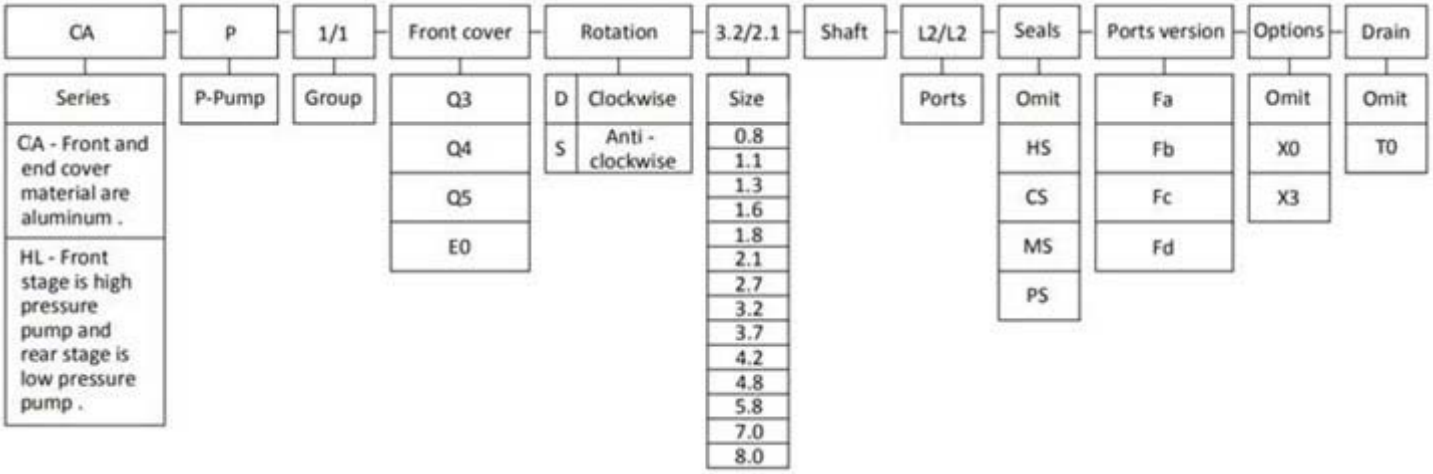

Remark : choose the shaft and ports can accord the types of " CAP1 " series ; and if you have other types , please contact us .

Seals

Omit - Range between -10℃and +80℃， inlet pressure up to max. 3 bar absolute (standard seal) .

HS - Version suitable for fluid at hi-temperatures , range between -10℃and +120℃ .

CS - Version suitable for fluid at low-temperatures , range between -40℃and +80℃ .

MS - Version suitable for inlet pressure up to max. 3 and 6 bar absolute .

PS - Version suitable for inlet pressure up to max. 3 and 10 bar absolute .

Ports version

Fa - two inlet and two outlet (separated type) .

Fb - two inlet and two outlet (common type) .

Fc - one inlet and two outlet (inlet on the front pump) .

Fd - one inlet and one outlet (only for " HL " series) .

Options

Omit - Have no valve .

X0 - pressure valve .

X3 - special integrated valve .

Drain

Omit - Have no drain .

T0 - Internal drain .

Examples

CAP1/1E0-D-2.1/4.2Z1L2/L2-Fa = CA series , 1/1 group tandem pump , E0 front cover , Clockwise , 2.1 and 4.1 cc/rev , Z1 shaft , L2 and L2 ports , standard seal , two inlet and two outlet (separated type) .

CAP1/1E0-Fa

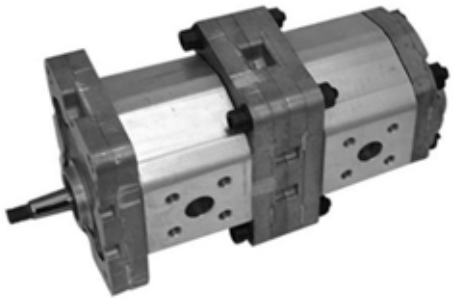

- ★ Use axial gap automatic compensation mechanism.
- ★ High sustained working pressure and long service life .
- ★ Anti fouling ability is strong and suitable for power units, machines and other kinds Of hydraulic systems .

OUTLET **INLET**

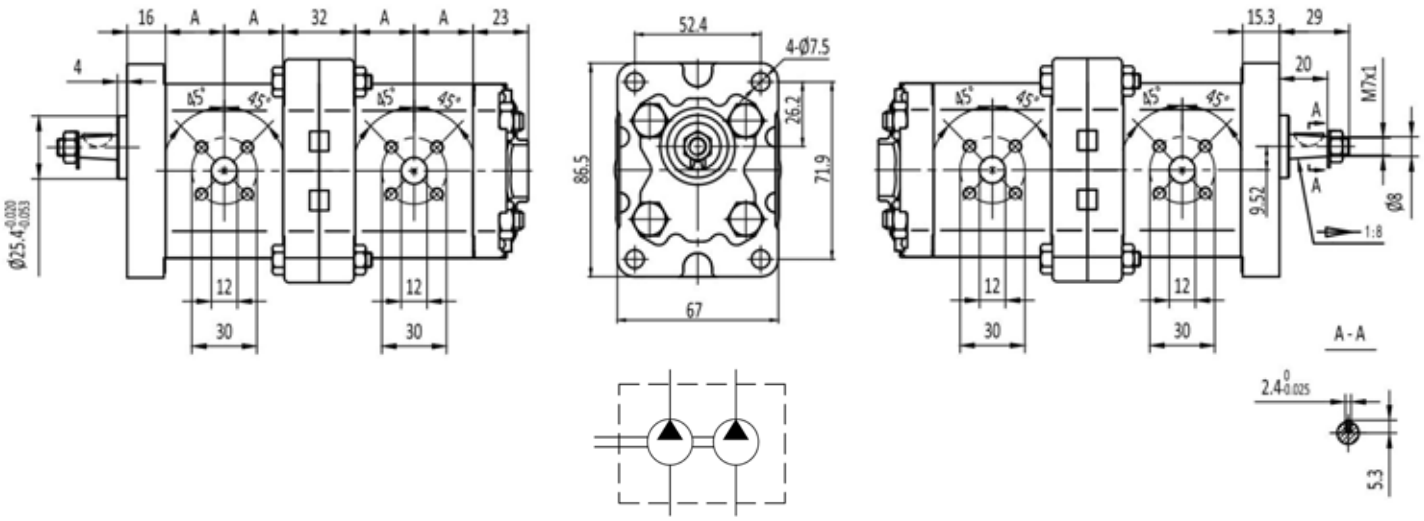

Type	Displacement	Max. pressure			Max. speed	Min. speed	Dimensions
		P1	P2	P3			A
	(cm^3/rev)	bar	bar	bar	(r/min)	(r/min)	mm
CAP1/1E0-D-**/**-Fa	0.8	200	225	250	3000	1000	17.8
	1.1	200	225	250	3000	1000	18
	1.3	200	225	250	3000	1000	18.5
	1.6	200	225	250	3000	1000	19
	1.8	200	225	250	3000	1000	19.5
	2.1	200	225	250	3000	1000	20
	2.7	200	225	250	3000	800	21
	3.2	200	225	250	3000	800	22
	3.7	200	225	250	3000	800	23
	4.2	200	225	250	3000	800	24
	4.8	190	210	230	3000	600	25
	5.8	190	210	230	3000	600	27
	7.0	160	180	200	2500	600	29
	8.0	160	180	200	2100	600	31

CAP1/1E0-Fb

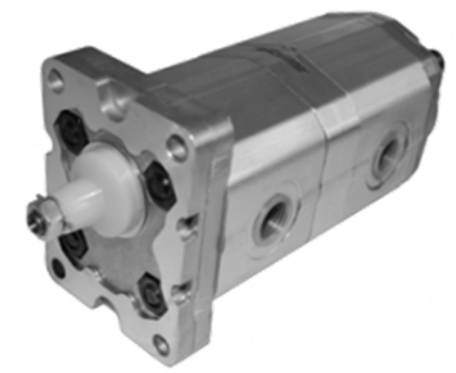

★ Use axial gap automatic compensation mechanism.

★ High sustained working pressure and long service life .

★ Anti fouling ability is strong and suitable for power units, machines and other kinds Of hydraulic systems .

OUTLET **INLET**

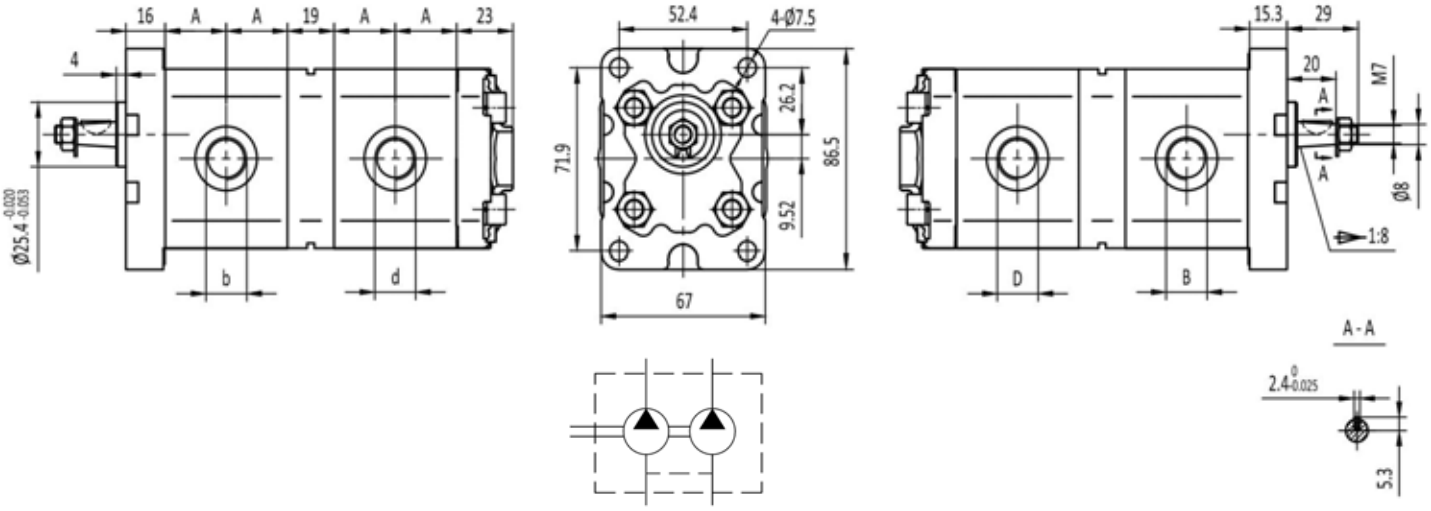

Type	Displacement	Max. pressure			Max. speed	Min. speed	Dimensions				
		P1	P2	P3			A	B	D	b	d
	(cm^3/rev)	bar	bar	bar	(r/min)	(r/min)	mm				
CAP1/1E0-D-**/**-Fb	0.8	200	225	250	3000	1000	17.8	G3/8	G3/8	G3/8	G3/8
	1.1	200	225	250	3000	1000	18	G3/8	G3/8	G3/8	G3/8
	1.3	200	225	250	3000	1000	18.5	G3/8	G3/8	G3/8	G3/8
	1.6	200	225	250	3000	1000	19	G3/8	G3/8	G3/8	G3/8
	1.8	200	225	250	3000	1000	19.5	G3/8	G3/8	G3/8	G3/8
	2.1	200	225	250	3000	1000	20	G3/8	G3/8	G3/8	G3/8
	2.7	200	225	250	3000	800	21	G3/8	G3/8	G3/8	G3/8
	3.2	200	225	250	3000	800	22	G3/8	G3/8	G3/8	G3/8
	3.7	200	225	250	3000	800	23	G3/8	G3/8	G3/8	G3/8
	4.2	200	225	250	3000	800	24	G3/8	G3/8	G3/8	G3/8
	4.8	190	210	230	3000	600	25	G3/8	G3/8	G3/8	G3/8
	5.8	190	210	230	3000	600	27	G3/8	G3/8	G3/8	G3/8
	7.0	160	180	200	2500	600	29	G3/8	G3/8	G3/8	G3/8
	8.0	160	180	200	2100	600	31	G3/8	G3/8	G3/8	G3/8

HLP1/1E0-FdX3T0

★ Use axial gap automatic compensation mechanism.

★ High sustained working pressure and long service life .

★ Anti fouling ability is strong and suitable for trash compactors , log splitters , crimping Machines and metal forming machines etc .

OUTLET **INLET**

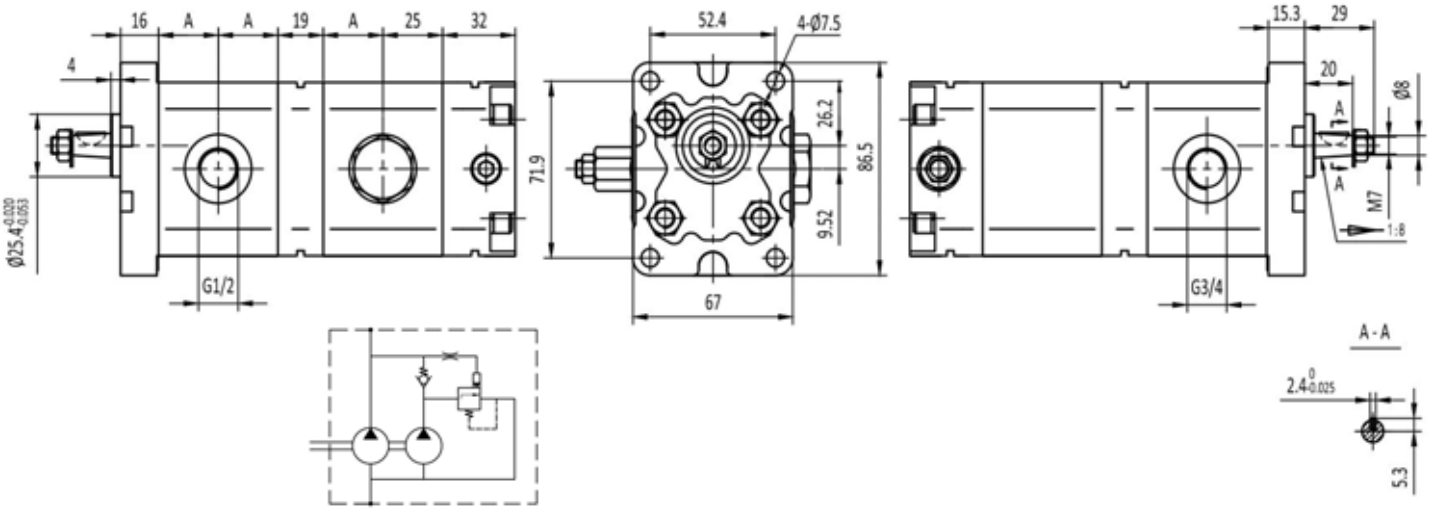

Type	Displacement	Front pump Max. pressure			Rear pump Max. pressure	Max. speed	Min. speed	Dimensions
		P1	P2	P3	P1			A
	(cm³/rev)	bar	bar	bar	bar	(r/min)	(r/min)	mm
HLP1/1E0-D-**/**-FdX3T0	0.8	200	225	250	According the setting pressure (standard setting 30 bar)	3000	1000	17.8
	1.1	200	225	250		3000	1000	18
	1.3	200	225	250		3000	1000	18.5
	1.6	200	225	250		3000	1000	19
	1.8	200	225	250		3000	1000	19.5
	2.1	200	225	250		3000	800	20
	2.7	200	225	250		3000	800	21
	3.2	200	225	250		3000	800	22
	3.7	200	225	250		3000	800	23
	4.2	200	225	250		3000	600	24
	4.8	190	210	230		3000	600	25
	5.8	190	210	230		3000	600	27
	7.0	160	180	200		2100	600	29
	8.0	160	180	200		2000	600	31

CAP1/1[HLP1/1]

PORTS VERSION

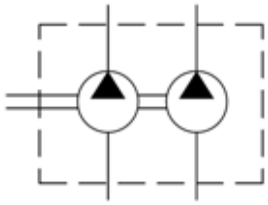

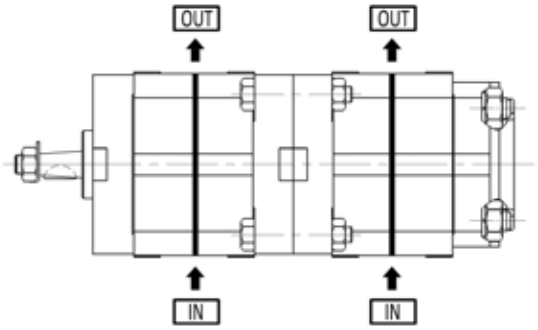

Fa

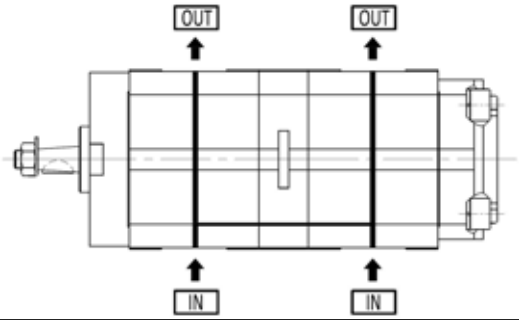

Fb

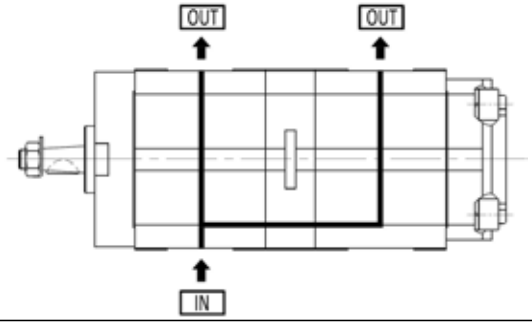

Fc

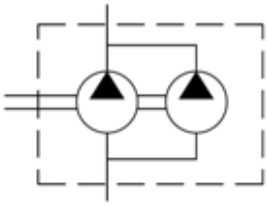

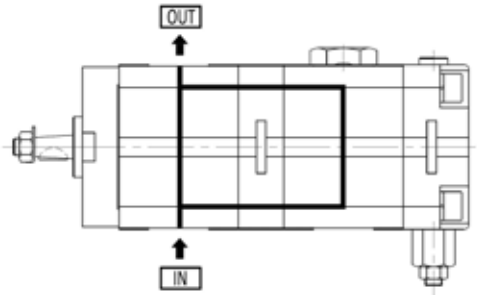

Fd

CAP1/1[HLP1/1]

OPTIONS

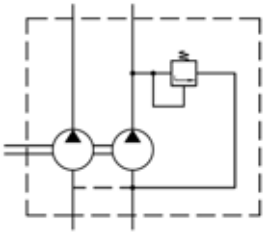

X0

DISCRIPTION
Pressure relief valve with internal drain ; setting pressure between 5 and 230 bar .

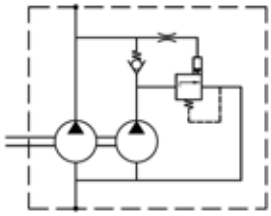

X3

DISCRIPTION
Special integrated valves for high-low gear pumps ; and standard setting pressure is 30 bar .

CHP2/2[HLP2/2]

HOW TO ORDER

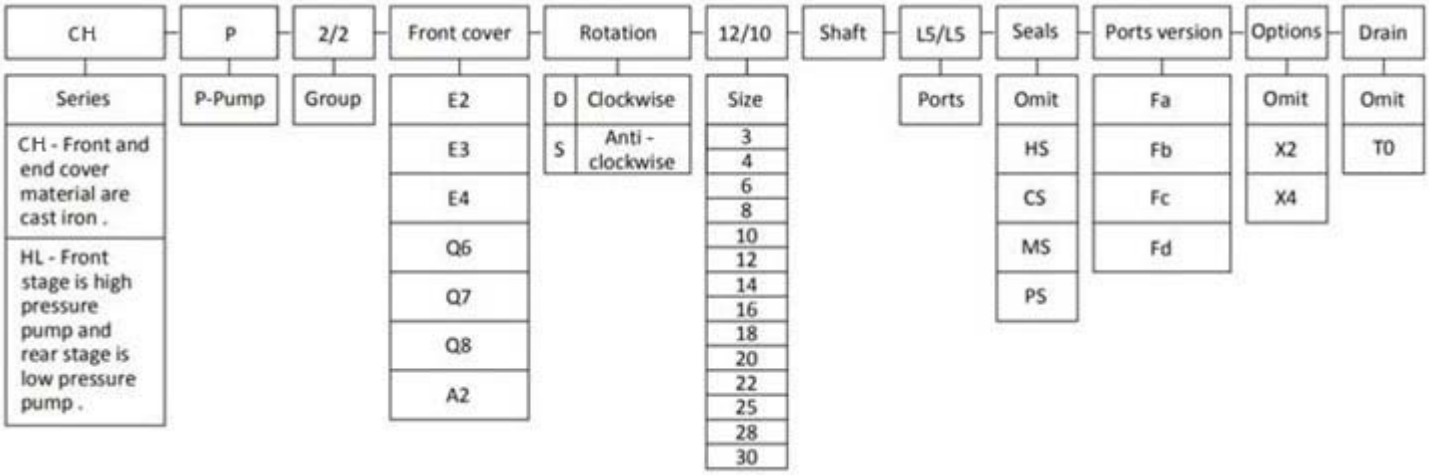

Remark : choose the shaft and ports can accord the types of " **CHP**2[CAP2] " series ; and if you have other types , please contact us .

Seals

Omit - Range between -10℃and +80℃， inlet pressure up to max. 3 bar absolute (standard seal) .

HS - Version suitable for fluid at hi-temperatures , range between -10℃and +120℃ .

CS - Version suitable for fluid at low-temperatures , range between -40℃and +80℃ .

MS - Version suitable for inlet pressure up to max. 3 and 6 bar absolute .

PS - Version suitable for inlet pressure up to max. 3 and 10 bar absolute .

Ports version

Fa - two inlet and two outlet (separated type) .

Fb - two inlet and two outlet (common type) .

Fc - one inlet and two outlet (inlet on the front pump) .

Fd - one inlet and one outlet (only for " HL " series) .

Options

Omit - Have no valve .

X2 - pressure valve .

X4 - special integrated valve .

Drain

Omit - Have no drain .

T0 - Internal drain .

Examples

CHP2/2E2-D-12/10Z5L5/L5-Fa = **CH series** , 2/2 group tandem pump , E2 front cover , Clockwise , 12 and 10 cc/rev , Z5 shaft , L5 and L5 ports , standard seal , two inlet and two outlet (separated type) .

CHP2/2E2-Fa

★ Use axial gap automatic compensation mechanism.

★ High sustained working pressure and long service life .

★ Anti fouling ability is strong and suitable for power units , tractors ,machines and other kinds Of hydraulic systems .

OUTLET **INLET**

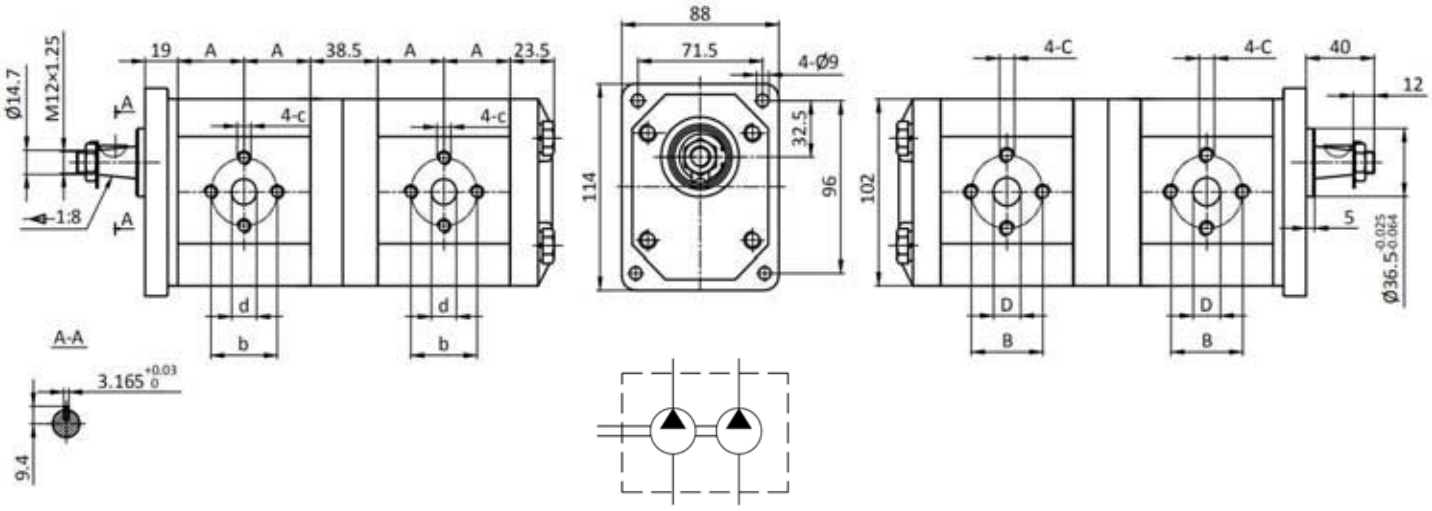

Type	Displacement	Max. pressure			Max. speed	Min. speed	Dimensions						
		P1	P2	P3			A	B	D	C	b	d	c
	(cm³/rev)	bar	bar	bar	(r/min)	(r/min)	mm	mm	mm		mm	mm	
CHP2/2E2-D-**/**-Fa	3	200	225	250	3000	800	24.5	30	13	M6	30	13	M6
	4	200	225	250	3000	600	25.3	30	13	M6	30	13	M6
	6	200	225	250	3000	600	27	30	13	M6	30	13	M6
	8	200	225	250	3000	500	28.6	30	13	M6	30	13	M6
	10	200	225	250	3000	500	30.3	40	20	M8	30	13	M6
	12	200	225	250	3000	500	32	40	20	M8	30	13	M6
	14	200	225	250	3000	500	33.6	40	20	M8	30	13	M6
	16	200	225	250	3000	500	35.3	40	20	M8	30	13	M6
	18	200	225	250	3000	500	37	40	20	M8	30	13	M6
	20	200	225	250	3000	400	38.6	40	20	M8	30	13	M6
	22	200	225	250	3000	400	40.3	40	20	M8	30	13	M6
	25	200	215	230	3000	400	42.8	40	22	M8	30	13	M6
	28	180	190	200	2500	400	45.3	40	22	M8	30	13	M6
	30	160	170	180	2500	400	47	40	22	M8	30	13	M6

CHP2/2E2-Fb

- ★ Use axial gap automatic compensation mechanism.
- ★ High sustained working pressure and long service life .
- ★ Anti fouling ability is strong and suitable for power units , tractors ,machines and other kinds 0f hydraulic systems .

OUTLET **INLET**

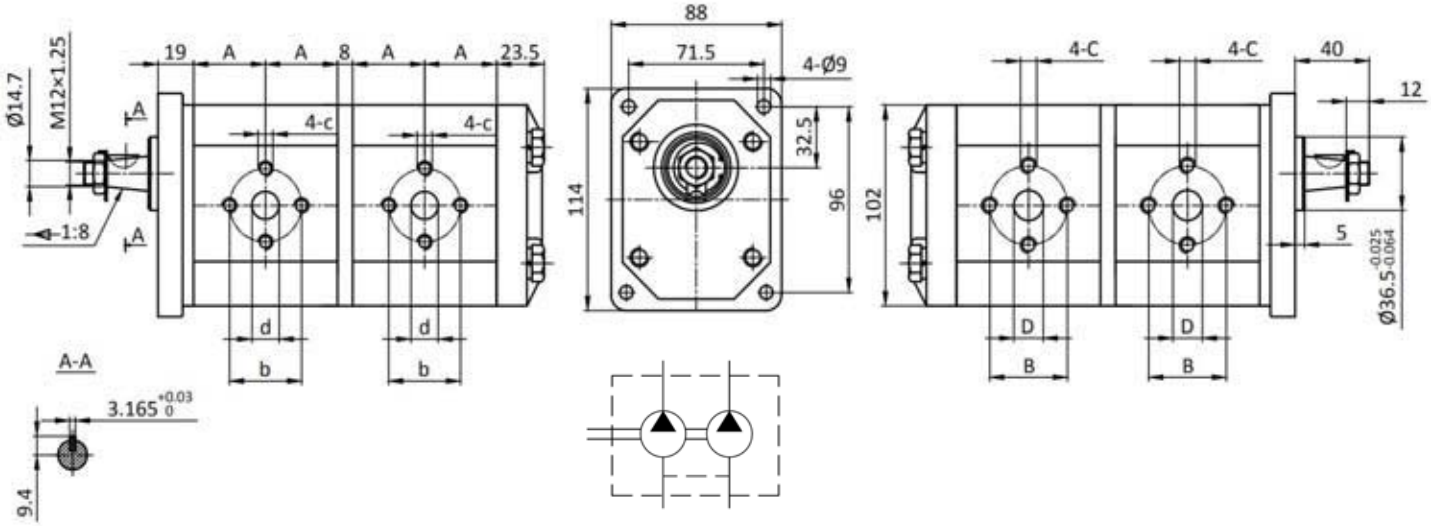

Type	Displacement	Max. pressure			Max. speed	Min. speed	Dimensions						
		P1	P2	P3			A	B	D	C	b	d	c
	(cm³/rev)	bar	bar	bar	(r/min)	(r/min)	mm	mm	mm		mm	mm	
CHP2/2E2-D-**/**-Fb	3	200	225	250	3000	800	24.5	30	13	M6	30	13	M6
	4	200	225	250	3000	600	25.3	30	13	M6	30	13	M6
	6	200	225	250	3000	600	27	30	13	M6	30	13	M6
	8	200	225	250	3000	500	28.6	30	13	M6	30	13	M6
	10	200	225	250	3000	500	30.3	40	20	M8	30	13	M6
	12	200	225	250	3000	500	32	40	20	M8	30	13	M6
	14	200	225	250	3000	500	33.6	40	20	M8	30	13	M6
	16	200	225	250	3000	500	35.3	40	20	M8	30	13	M6
	18	200	225	250	3000	500	37	40	20	M8	30	13	M6
	20	200	225	250	3000	400	38.6	40	20	M8	30	13	M6
	22	200	225	250	3000	400	40.3	40	20	M8	30	13	M6
	25	200	215	230	3000	400	42.8	40	22	M8	30	13	M6
	28	180	190	200	2500	400	45.3	40	22	M8	30	13	M6
	30	160	170	180	2500	400	47	40	22	M8	30	13	M6

CHP2/2E2-FcX2T0

- ★ Use axial gap automatic compensation mechanism.
- ★ High sustained working pressure and long service life .
- ★ Anti fouling ability is strong and suitable for power units , tractors ,machines and other kinds 0f hydraulic systems .

OUTLET **INLET**

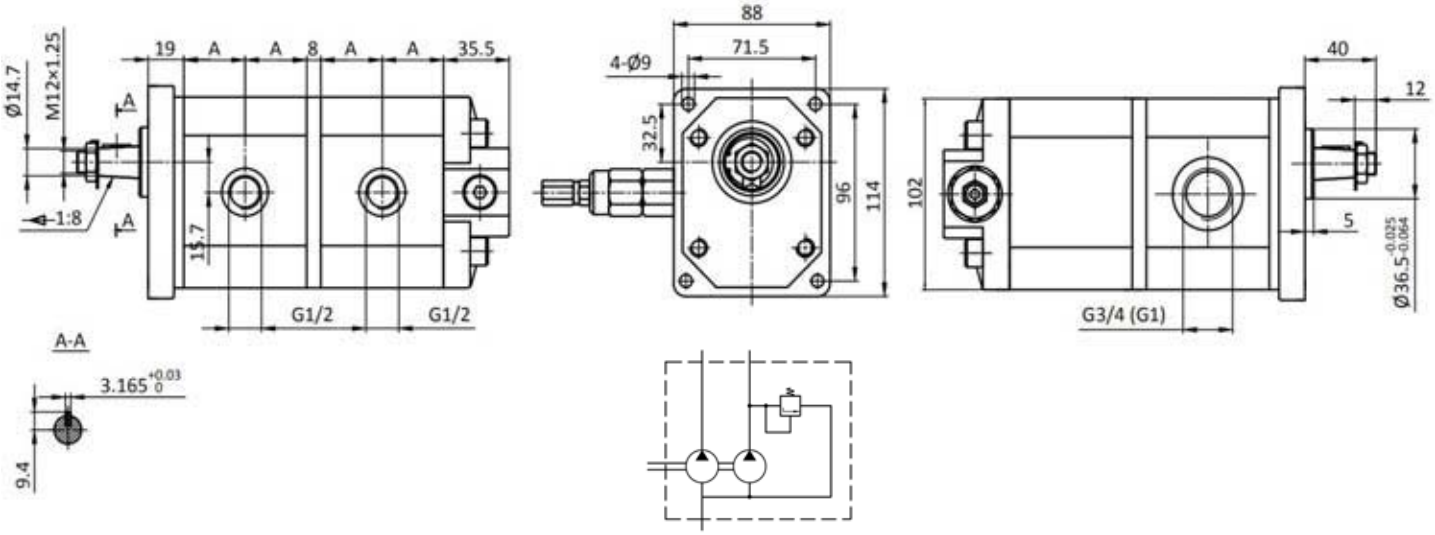

Type	Displacement	Front pump Max. pressure			Rear pump Max. pressure	Max. speed	Min. speed	Dimensions
		P1	P2	P3	P1			A
	(cm^3/rev)	bar	bar	bar	bar	(r/min)	(r/min)	mm
CHP2/2E2-D-**/**-FcX2T0	3	200	225	250	According the setting pressure (setting pressure between 5 and 250 bar)	3000	800	24.5
	4	200	225	250		3000	600	25.3
	6	200	225	250		3000	600	27
	8	200	225	250		3000	500	28.6
	10	200	225	250		3000	500	30.3
	12	200	225	250		3000	500	32
	14	200	225	250		3000	500	33.6
	16	200	225	250		3000	500	35.3
	18	200	225	250		3000	500	37
	20	200	225	250		3000	400	38.6
	22	200	225	250		3000	400	40.3
	25	200	215	230		3000	400	42.8
	28	180	190	200		2500	400	45.3
	30	160	170	180		2500	400	47

HLP2/2E2-FdX4

★ Use axial gap automatic compensation mechanism.

★ High sustained working pressure and long service life .

★ Anti fouling ability is strong and suitable for power units , tractors ,machines and other kinds 0f hydraulic systems .

OUTLET **INLET**

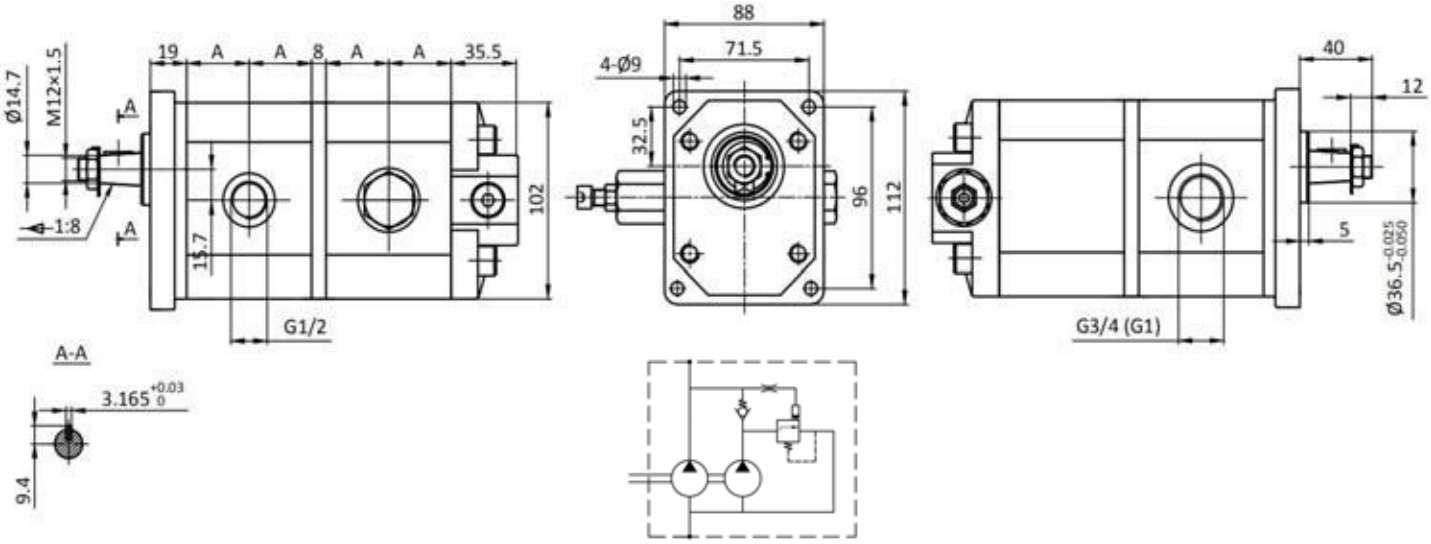

Type	Displacement	Front pump Max. pressure			Rear pump Max. pressure	Max. speed	Min. speed	Dimensions
		P1	P2	P3	P1			A
	(cm³/rev)	bar	bar	bar	bar	(r/min)	(r/min)	mm
HLP2/2E2-D-**/**-FdX4T0	3	200	225	250	According the setting pressure (standard setting 50 bar)	3000	800	24.5
	4	200	225	250		3000	600	25.3
	6	200	225	250		3000	600	27
	8	200	225	250		3000	500	28.6
	10	200	225	250		3000	500	30.3
	12	200	225	250		3000	500	32
	14	200	225	250		3000	500	33.6
	16	200	225	250		3000	500	35.3
	18	200	225	250		3000	500	37
	20	200	225	250		3000	400	38.6
	22	200	225	250		3000	400	40.3
	25	200	215	230		3000	400	42.8
	28	180	190	200		2500	400	45.3
	30	160	170	180		2500	400	47

CHP2/2[HLP2/2]

PORTS VERSION

Fa

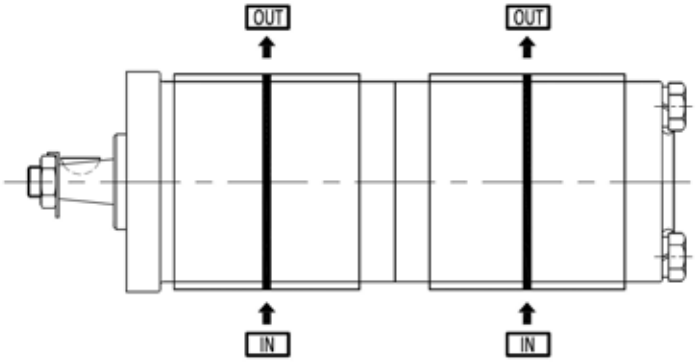

Fb

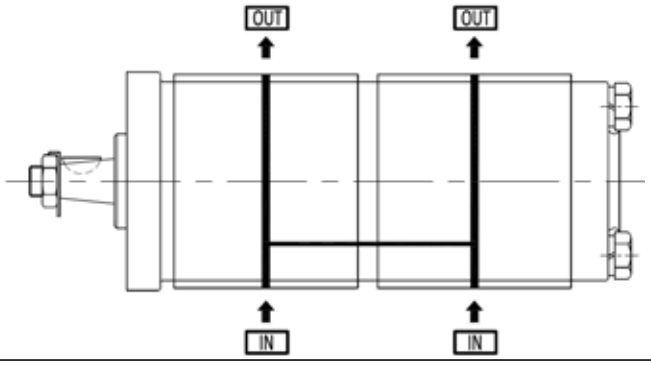

Fc

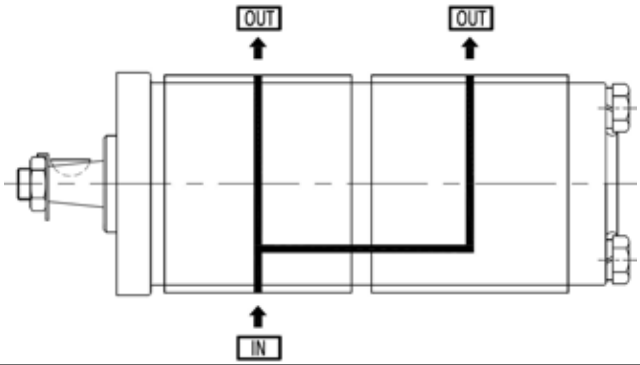

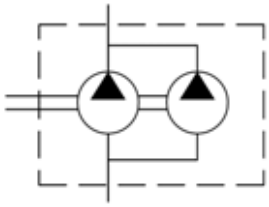

Fd

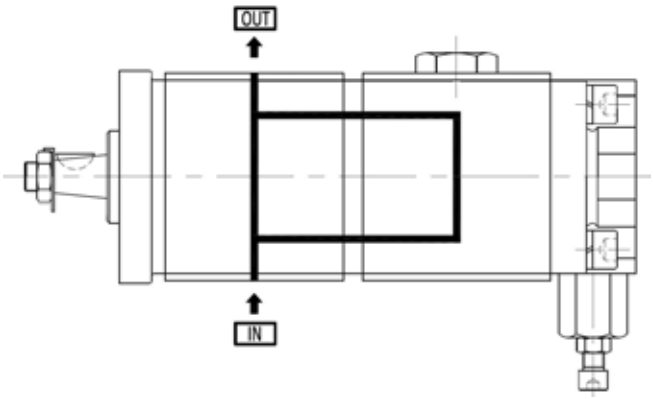

CHP2/2[HLP2/2]

OPTIONS

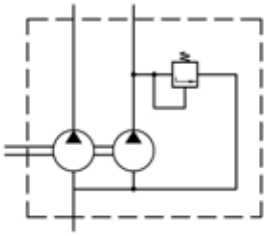

X2

DISCRIPTION
Pressure relief valve with internal drain ; setting pressure between 5 and 230 bar .

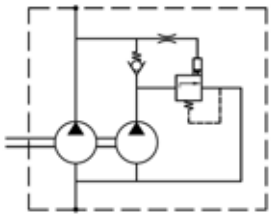

X4

DISCRIPTION
Special integrated valves for high-low gear pumps ; and standard setting pressure is 50 bar .

CHP3/2

HOW TO ORDER

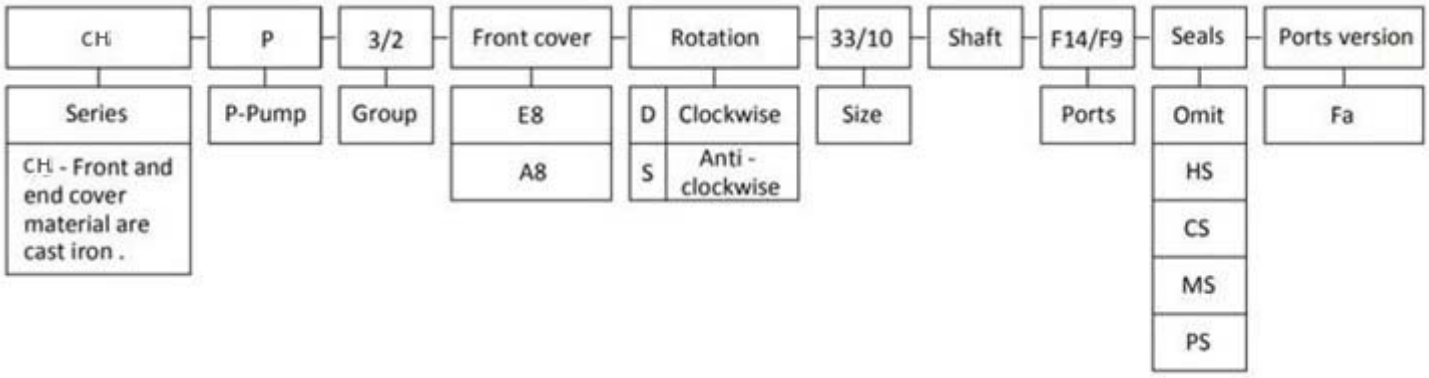

Remark : Choose the shaft , sizes and ports of the front pump can accord the types of " **CHP**3 " series ; and choose the sizes and ports of the rear pump can accord the types of " **CHP**2[CAP2] " series , and if you have other types , please contact us .

Seals

Omit - Range between -10℃and +80℃， inlet pressure up to max. 3 bar absolute (standard seal) .

HS - Version suitable for fluid at hi-temperatures , range between -10℃and +120℃ .

CS - Version suitable for fluid at low-temperatures , range between -40℃and +80℃ .

MS - Version suitable for inlet pressure up to max. 3 and 6 bar absolute .

PS - Version suitable for inlet pressure up to max. 3 and 10 bar absolute .

Ports version

Fa - two inlet and two outlet (separated type) .

Examples

CHP3/2E8-D-33/10Z9F14/F9-Fa = **CH series** , 3/2 group tandem pump , E8 front cover , Clockwise , 33 and 10 cc/rev , Z9 shaft , F14 and F9 ports , standard seal , two inlet and two outlet (separated type) .

CHP3/2E8-Fa

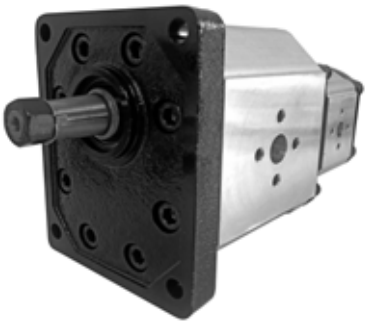

- ★ Use axial gap automatic compensation mechanism.
- ★ High sustained working pressure and long service life .
- ★ Anti fouling ability is strong and suitable for power units , tractors ,machines and other kinds Of hydraulic systems .

OUTLET **INLET**

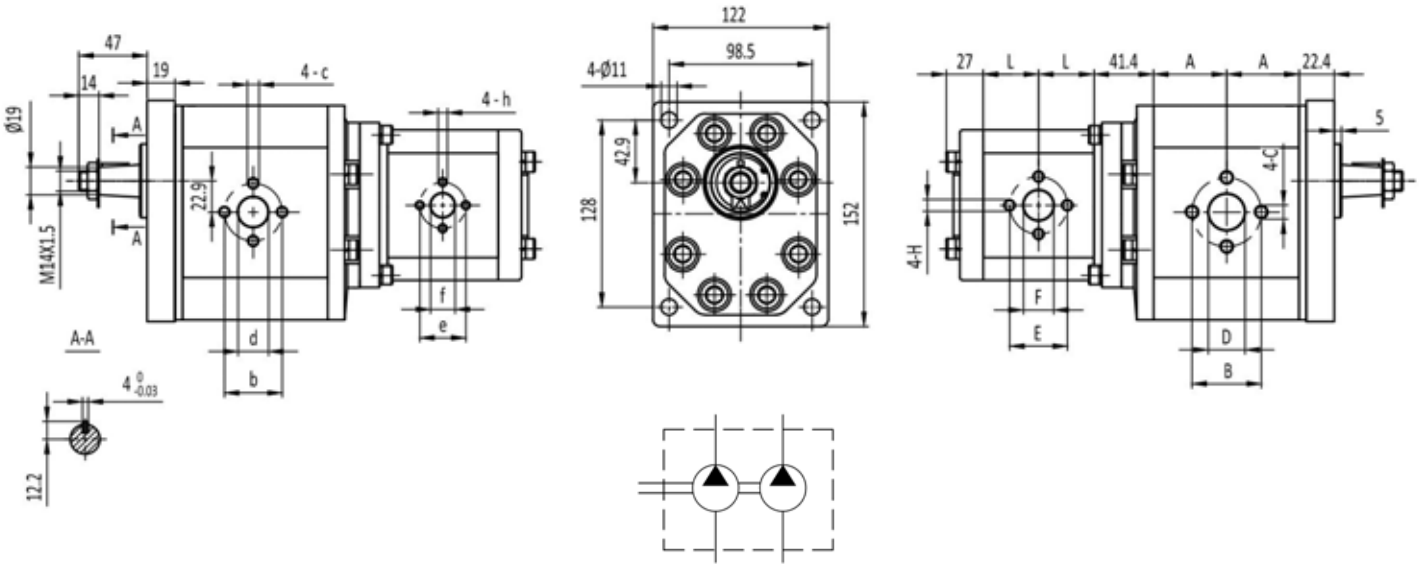

Technical parameter table of front pump													
Type	Displacement	Max. pressure			Max.	Min.	Dimensions						
		P1	P2	P3	speed	speed	A	B	D	C	b	d	c
	(cm^3/rev)	bar	bar	bar	(r/min)	(r/min)	mm	mm	mm		mm	mm	
CHP3/2E8-D-20/**-Fa	20	200	225	250	3000	600	40.6	40	19	M8	40	19	M8
CHP3/2E8-D-22/**-Fa	22	200	225	250	3000	600	41.6	40	19	M8	40	19	M8
CHP3/2E8-D-26/**-Fa	26	200	225	250	3000	600	43.1	40	19	M8	40	19	M8
CHP3/2E8-D-33/**-Fa	33	200	225	250	3000	500	46.1	51	27	M10	40	19	M8
CHP3/2E8-D-39/**-Fa	39	200	225	250	3000	500	49.6	51	27	M10	40	19	M8
CHP3/2E8-D-46/**-Fa	46	200	225	250	3000	500	52.6	51	27	M10	40	19	M8
CHP3/2E8-D-50/**-Fa	50	200	225	250	3000	500	54.6	51	27	M10	40	19	M8
CHP3/2E8-D-52/**-Fa	52	200	225	250	3000	500	55.6	51	27	M10	40	19	M8
CHP3/2E8-D-55/**-Fa	55	200	230	250	2800	400	56.6	51	27	M10	40	19	M8
CHP3/2E8-D-63/**-Fa	63	200	230	250	2800	400	60.6	62	33	M10	51	27	M10
CHP3/2E8-D-71/**-Fa	71	180	200	220	2500	400	64.1	62	33	M10	51	27	M10

CHP3/2E8-Fa

Technical parameter table of rear pump													
Type	Displacement	Max. pressure			Max.	Min.	Dimensions						
		P1	P2	P3	speed	speed	L	E	F	H	e	f	h
	(cm^3/rev)	bar	bar	bar	(r/min)	(r/min)	mm	mm	mm		mm	mm	
CHP3/2E8-D-**/3-Fa	3	200	225	250	3000	800	24.8	30	13	M6	30	13	M6
CHP3/2E8-D-**/4-Fa	4	200	225	250	3000	600	25.5	30	13	M6	30	13	M6
CHP3/2E8-D-**/6-Fa	6	200	225	250	3000	600	27.1	30	13	M6	30	13	M6
CHP3/2E8-D-**/8-Fa	8	200	225	250	3000	500	28.7	30	13	M6	30	13	M6
CHP3/2E8-D-**/10-Fa	10	200	225	250	3000	500	30.3	40	20	M8	30	13	M6
CHP3/2E8-D-**/12-Fa	12	200	225	250	3000	500	32	40	20	M8	30	13	M6
CHP3/2E8-D-**/14-Fa	14	200	225	250	3000	500	33.6	40	20	M8	30	13	M6
CHP3/2E8-D-**/16-Fa	16	200	225	250	3000	500	35.3	40	20	M8	30	13	M6
CHP3/2E8-D-**/18Fa	18	200	225	250	3000	500	36.9	40	20	M8	30	13	M6
CHP3/2E8-D-**/20-Fa	20	200	225	250	3000	400	38.5	40	20	M8	30	13	M6
CHP3/2E8-D-**/22-Fa	22	200	225	250	3000	400	40.2	40	20	M8	30	13	M6
CHP3/2E8-D-**/25-Fa	25	200	215	230	3000	400	42.6	40	22	M8	30	13	M6
CHP3/2E8-D-**/28-Fa	28	180	190	200	2500	400	45.1	40	22	M8	30	13	M6
CHP3/2E8-D-**/30-Fa	30	160	170	180	2500	400	46.8	40	22	M8	30	13	M6

CHP3/2A8-Fa

★ Use axial gap automatic compensation mechanism.

★ High sustained working pressure and long service life .

★ Anti fouling ability is strong and suitable for power units , tractors ,machines and other kinds Of hydraulic systems .

OUTLET **INLET**

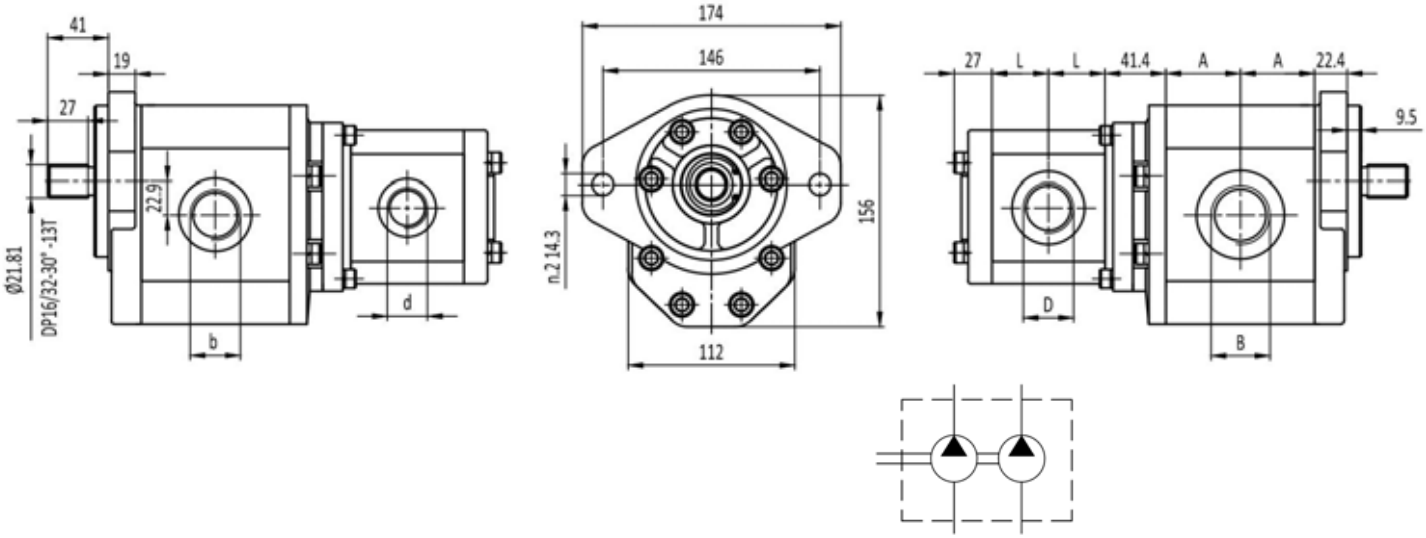

Technical parameter table of front pump									
Type	Displacement	Max. pressure			Max.	Min.	Dimensions		
		P1	P2	P3	speed	speed	A	B	b
	(cm^3/rev)	bar	bar	bar	(r/min)	(r/min)	mm		
CHP3/2A8-D-20/**-Fa	20	200	225	250	3000	600	40.6	G3/4	G3/4
CHP3/2A8-D-22/**-Fa	22	200	225	250	3000	600	41.6	G3/4	G3/4
CHP3/2A8-D-26/**-Fa	26	200	225	250	3000	600	43.1	G1	G3/4
CHP3/2A8-D-33/**-Fa	33	200	225	250	3000	500	46.1	G1	G3/4
CHP3/2A8-D-39/**-Fa	39	200	225	250	3000	500	49.6	G1	G3/4
CHP3/2A8-D-46/**-Fa	46	200	225	250	3000	500	52.6	G1 1/4	G1
CHP3/2A8-D-50/**-Fa	50	200	225	250	3000	500	54.6	G1 1/4	G1
CHP3/2A8-D-52/**-Fa	52	200	225	250	3000	500	55.6	G1 1/4	G1
CHP3/2A8-D-55/**-Fa	55	200	230	250	2800	400	56.6	G1 1/4	G1
CHP3/2A8-D-63/**-Fa	63	200	230	250	2800	400	60.6	G1 1/4	G1
CHP3/2A8-D-71/**-Fa	71	180	200	220	2500	400	64.1	G1 1/2	G1 1/4

CHP3/2A8-Fa

Technical parameter table of rear pump									
Type	Displacement	Max. pressure			Max.	Min.	Dimensions		
		P1	P2	P3	speed	speed	L	D	d
	(cm^3/rev)	bar	bar	bar	(r/min)	(r/min)	mm		
CHP3/2A8-D-**/3-Fa	3	200	225	250	3000	800	24.8	G1/2	G1/2
CHP3/2A8-D-**/4-Fa	4	200	225	250	3000	600	25.5	G1/2	G1/2
CHP3/2A8-D-**/6-Fa	6	200	225	250	3000	600	27.1	G3/4	G1/2
CHP3/2A8-D-**/8-Fa	8	200	225	250	3000	500	28.7	G3/4	G1/2
CHP3/2A8-D-**/10-Fa	10	200	225	250	3000	500	30.3	G3/4	G1/2
CHP3/2A8-D-**/12-Fa	12	200	225	250	3000	500	32	G3/4	G1/2
CHP3/2A8-D-**/14-Fa	14	200	215	230	3000	500	33.6	G3/4	G1/2
CHP3/2A8-D-**/16-Fa	16	200	210	220	3000	500	35.3	G3/4	G1/2
CHP3/2A8-D-**/18-Fa	18	180	190	200	3000	500	36.9	G3/4	G1/2
CHP3/2A8-D-**/20-Fa	20	160	270	180	3000	400	38.5	G3/4	G1/2
CHP3/2A8-D-**/22-Fa	22	140	150	160	3000	400	40.2	G3/4	G1/2
CHP3/2A8-D-**/25-Fa	25	120	130	140	3000	400	42.6	G3/4	G1/2
CHP3/2A8-D-**/28-Fa	28	110	120	130	2500	400	45.1	G3/4	G1/2
CHP3/2A8-D-**/30-Fa	30	100	110	120	2500	400	46.8	G3/4	G1/2

PORTS VERSION

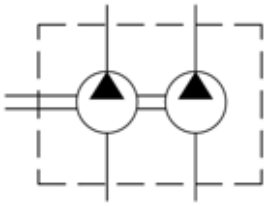

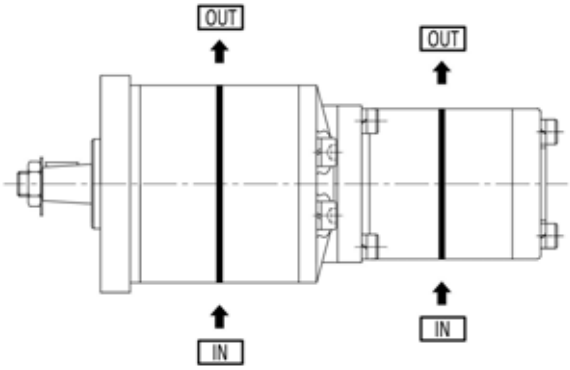

Fa

CHP3/3

HOW TO ORDER

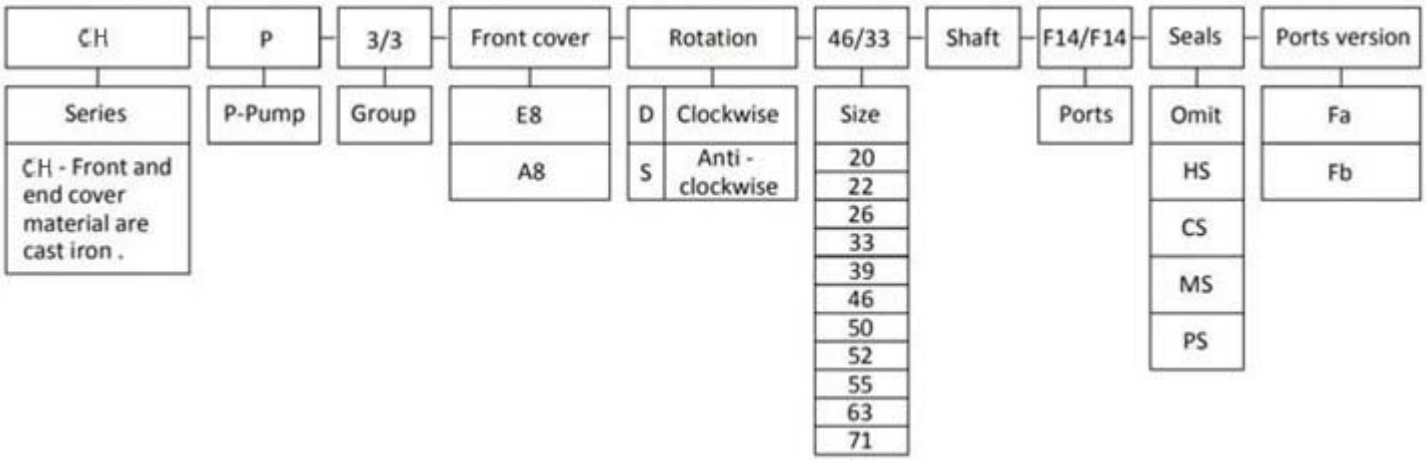

Remark : Choose the shaft and ports can accord the types of " **CHP**3 " series ; and if you have other types , please contact us .

Seals

Omit - Range between -10℃and +80℃， inlet pressure up to max. 3 bar absolute (standard seal) .

HS - Version suitable for fluid at hi-temperatures , range between -10℃and +120℃ .

CS - Version suitable for fluid at low-temperatures , range between -40℃and +80℃ .

MS - Version suitable for inlet pressure up to max. 3 and 6 bar absolute .

PS - Version suitable for inlet pressure up to max. 3 and 10 bar absolute .

Ports version

Fa - two inlet and two outlet (separated type) .

Fb - two inlet and two outlet (common type) .

Examples

CHP3/3E8-D-46/33Z9F14/F14-Fa = **CH series** ,3/3 group tandem pump , E8 front cover , Clockwise , 46 and 33 cc/rev , Z9 shaft ,F14 and F14 ports , standard seal , two inlet and two outlet (separated type) .

CHP3/3E8-Fa

★ Use axial gap automatic compensation mechanism.

★ High sustained working pressure and long service life .

★ Anti fouling ability is strong and suitable for power units , tractors ,machines and other kinds Of hydraulic systems .

OUTLET **INLET**

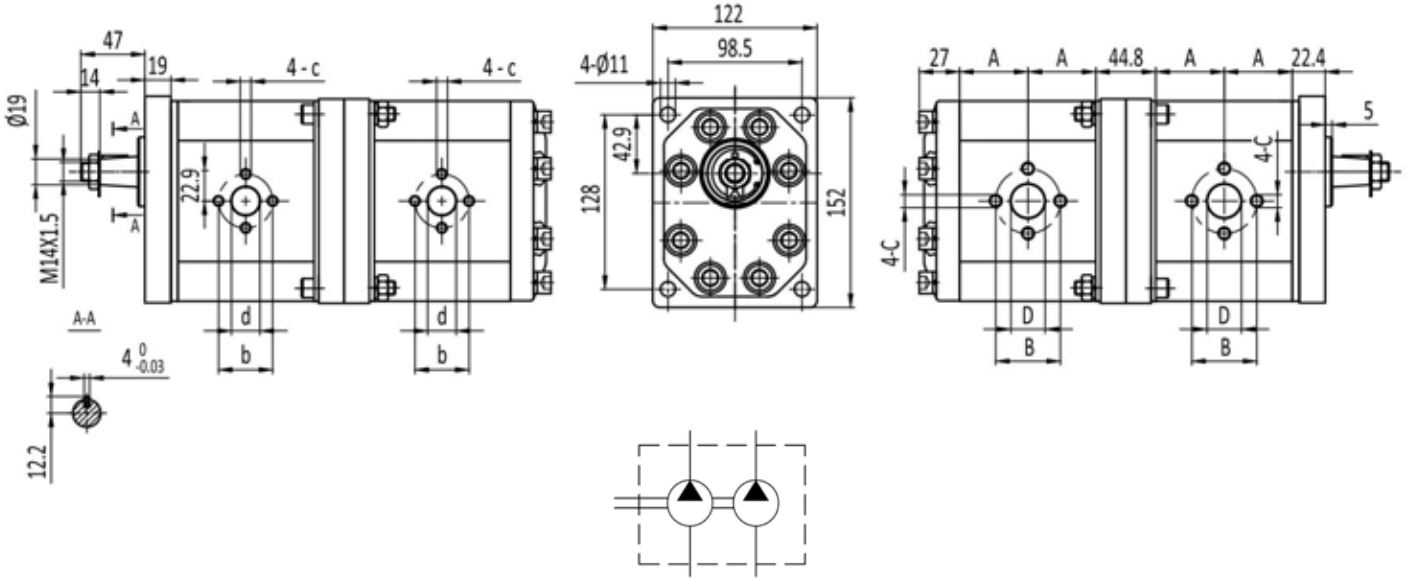

Type	Displacement	Max. pressure			Max.	Min.	Dimensions						
		P1	P2	P3	speed	speed	A	B	D	C	b	d	c
	(cm^3/rev)	bar	bar	bar	(r/min)	(r/min)	mm	mm	mm		mm	mm	
CHP3/2E8-D-**/**-Fa	20	200	225	250	3000	600	40.6	40	19	M8	40	19	M8
	22	200	225	250	3000	600	41.6	40	19	M8	40	19	M8
	26	200	225	250	3000	600	43.1	40	19	M8	40	19	M8
	33	200	225	250	3000	500	46.1	51	27	M10	40	19	M8
	39	200	225	250	3000	500	49.6	51	27	M10	40	19	M8
	46	200	225	250	3000	500	52.6	51	27	M10	40	19	M8
	50	200	225	250	3000	500	54.6	51	27	M10	40	19	M8
	52	200	225	250	3000	500	55.6	51	27	M10	40	19	M8
	55	200	230	250	2800	400	56.6	51	27	M10	40	19	M8
	63	200	230	250	2800	400	60.6	62	33	M10	51	27	M10
	71	180	200	220	2500	400	64.1	62	33	M10	51	27	M10

CHP3/3A8-Fb

★ Use axial gap automatic compensation mechanism.

★ High sustained working pressure and long service life .

★ Anti fouling ability is strong and suitable for power units , tractors ,machines and other kinds Of hydraulic systems .

OUTLET **INLET**

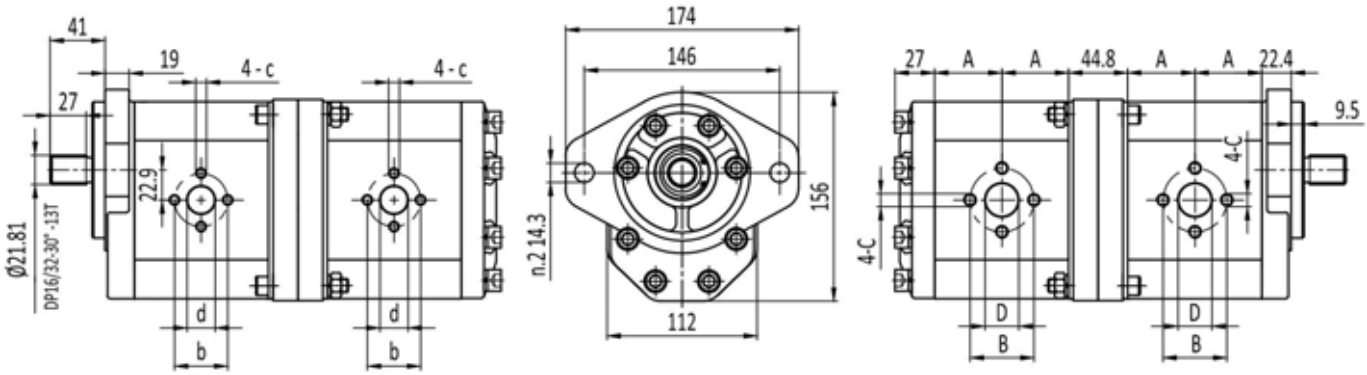

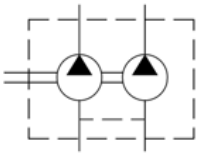

Type	Displacement	Max. pressure			Max. speed	Min. speed	Dimensions						
		P1	P2	P3			A	B	D	C	b	d	c
	(cm³/rev)	bar	bar	bar	(r/min)	(r/min)	mm	mm	mm		mm	mm	
CHP3/2A8-D-**/**-Fa	20	200	225	250	3000	600	40.6	40	19	M8	40	19	M8
	22	200	225	250	3000	600	41.6	40	19	M8	40	19	M8
	26	200	225	250	3000	600	43.1	40	19	M8	40	19	M8
	33	200	225	250	3000	500	46.1	51	27	M10	40	19	M8
	39	200	225	250	3000	500	49.6	51	27	M10	40	19	M8
	46	200	225	250	3000	500	52.6	51	27	M10	40	19	M8
	50	200	225	250	3000	500	54.6	51	27	M10	40	19	M8
	52	200	225	250	3000	500	55.6	51	27	M10	40	19	M8
	55	200	230	250	2800	400	56.6	51	27	M10	40	19	M8
	63	200	230	250	2800	400	60.6	62	33	M10	51	27	M10
	71	180	200	220	2500	400	64.1	62	33	M10	51	27	M10

CHP3/3

PORTS VERSION

Fa

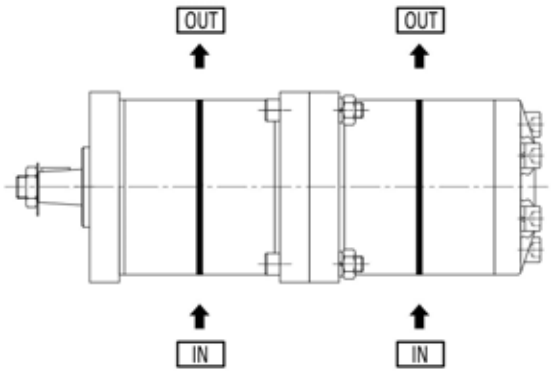

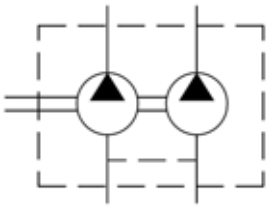

Fb

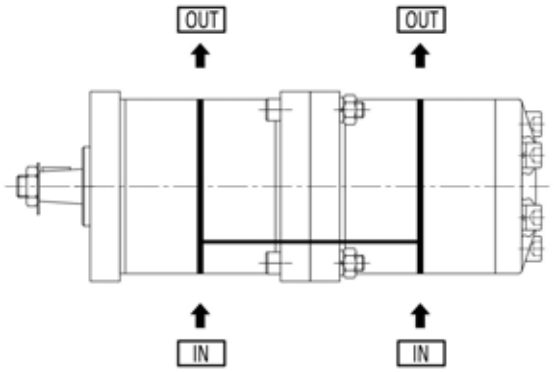

Note NOTES

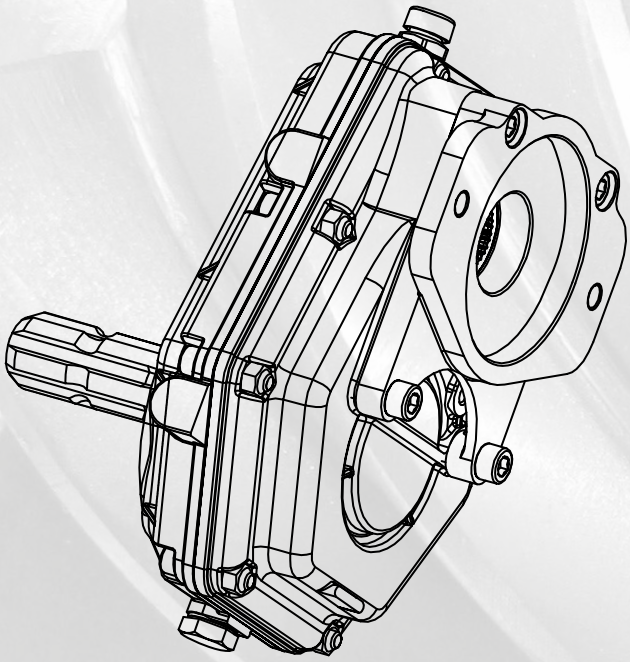

CMR® AGRICULTURE

Via Martiri della Romania, 4/C
42020 Borzano di Albinea (Reggio Emilia) ITALY
Tel. +39 0522 591011 - Fax +39 0522 349020
cmr@cmr.it - **www.cmr.it**